PRELIMINARY DESIGN FOR:

EXHIBIT 4

BEACHWALK

HALLANDALE BEACH, FLORIDA

DEVELOPER:

PRH – 2600 HALLANDALE BEACH LLC.
315 SOUTH BISCAYNE BLVD, 4TH FLR
MIAMI, FLORIDA 33132
TEL. (305) 533–0001 FAX (305) 513–5800

ZONING ATTORNEY:

GREENBERG TRAURIG , P.A.
401 EAST LAS OLAS BOULEVARD SUITE 2000
FORT LAUDERDALE, FLORIDA 33301
TEL. (954) 786–8234 FAX (954) 759–5534

ARCHITECTURE:

COHEN, FREEDMAN, ENCINOSA & ASSOC.
ARCHITECTS, P.A.
8085 N.W. 155TH STREET
MIAMI, FLORIDA 33016
TEL. (305) 826–3999 FAX (305) 826–4155

CIVIL/LANDSCAPE:

CALVIN, GIORDANO & ASSOCIATES
1800 ELLER DRIVE SUITE 600
FORT LAUDERDALE, FLORIDA 33316
TEL. (954) 921–7781 FAX (954) 921–8807

INDEX OF SHEETS

ARCHITECTURE:

A.0	COVER SHEET/DATA
E.1	EXISTING SITE PHOTOS
A.1	GROUND LEVEL PLAN
A.2	2nd LEVEL PLAN
A.3	3rd–6th LEVEL PLAN
A.4	7th–28th LEVEL PLAN
A.5	29th–31st LEVEL PLAN
A.6	TYPICAL TOWER PLAN
A.7	BUILDING ELEVATIONS
A.8	BUILDING ELEVATIONS
A.9	BUILDING SECTIONS
A.10	BUILDING RENDERINGS

CIVIL:

S–1	SURVEY
C.200	PAVING, GRADING, DRAINAGE PLAN
C.201	PAVING, GRADING, DRAINAGE DETAILS
C.202	PAVING, GRADING, DRAINAGE DETAILS
C.300	WATER AND SEWER PLAN
C.301	WATER DETAILS
C.302	WATER DETAILS
C.303	SANITARY SEWER DETAILS
C.600	FIRE ACCESS PLAN
C.700	GENERAL NOTES AND SPECIFICATIONS
C.701	GENERAL NOTES AND SPECIFICATIONS

LANDSCAPE:

LE.100	TREE DISPOSITION PLAN
L.010	LANDSCAPE NOTES & PLANT LIST
L.100	PROPOSED TREE PLANTING PLAN
L.101	PROPOSED SHRUB PLANTING PLAN
L.500	LANDSCAPE DETAILS
L.501	CIRCULATION PLAN

SITE DATA TABLE

	Existing	Proposed
Land Use	Neighborhood Commercial	Neighborhood Commercial
Zoning	City Central Business District (CCB) and Planned Redevelopment Overlay District (PRD)	CCB, PRD and Planned Development District (PDD)

Site Area	Square Footage	Acres
Lot Area	56,280	1.292
Vacated ROW	22,386	0.514
Total	78,666	1.806

	Required/Permitted	Provided
Height	350 feet (450 with PDD)	306'-08"
Unit Size		
2 Bedroom (24 units)	1,100 Square Feet	1,000 Square Feet
3 Bedroom (60 units)	1,705-1,885 Square Feet	1,200 Square Feet
Density	50 units per acre	46.51 units per acre
Pervious Area	15%	19.4%
Front Setback	Min- 5 feet Max – 15 feet	10'-03"
Rear Setback	25 feet	26'-04
Rear Setback (Diana)	25 feet	34'-06"
Side (SE 26th Ave)	15 feet	10'-00"
Side (Intracoastal)	15 feet	40'-10"
Setback Adjacent to Residential		
Rear Setback	25 feet	26'-04"
Rear Setback (Diana)	25 feet	34'-06"
Side Setback (Interior)	25 feet	31-00"
Residential Parking		
2 BR Condo	42 Spaces	42 Spaces
3 BR Condo	120 Spaces	120 Spaces
Guest	17 Spaces	17 Spaces
Hotel (Commercial) Parking		
216 Hotel Suites (432 Keys)	432 Spaces	264 spaces
Accessory Parking	7 Spaces	8 spaces
Total Parking*	618 Spaces	451 Spaces

*Parking for Beachwalk will be subject to a 24 hour/7 day a week valet agreement. There will be no charge for valet parking of handicap guests.

PARKING PROVIDED BY LEVEL:	REGULAR	TANDEM	
LEVEL 1	15	24	39 SPACES
LEVEL 2	25	76	101 SPACES
LEVEL 3	23	80	103 SPACES
LEVEL 4	23	80	103 SPACES
LEVEL 5	23	82	105 SPACES
TOTAL	109	342	451 SPACES

COHEN · FREEDMAN · ENCINOSA & ASSOC.
Architects, PA AA C000779
8085 N.W. 155th Street Miami Lakes, Florida 33016 305 826 3999

PRELIMINARY DESIGN FOR:
BEACHWALK
HALLANDALE BEACH, FLORIDA

revisions:

drawn by:

issue date: 07-15-11

sheet no: A.0

project: 3105

SITE LOCATION PHOTO

EXISTING SITE LOOKING NORTHEAST

EXISTING SITE LOOKING WEST

COHEN · FREEDMAN · ENCINOSA & ASSOC.
Architects, PA AA C000779
8085 N.W. 155th Street Miami Lakes, Florida 33016 305 826 3999

PRELIMINARY DESIGN FOR:
BEACHWALK
HALLANDALE BEACH, FLORIDA

revisions:

drawn by:

issue date: 07-15-11

sheet no: E.1

project: 3105

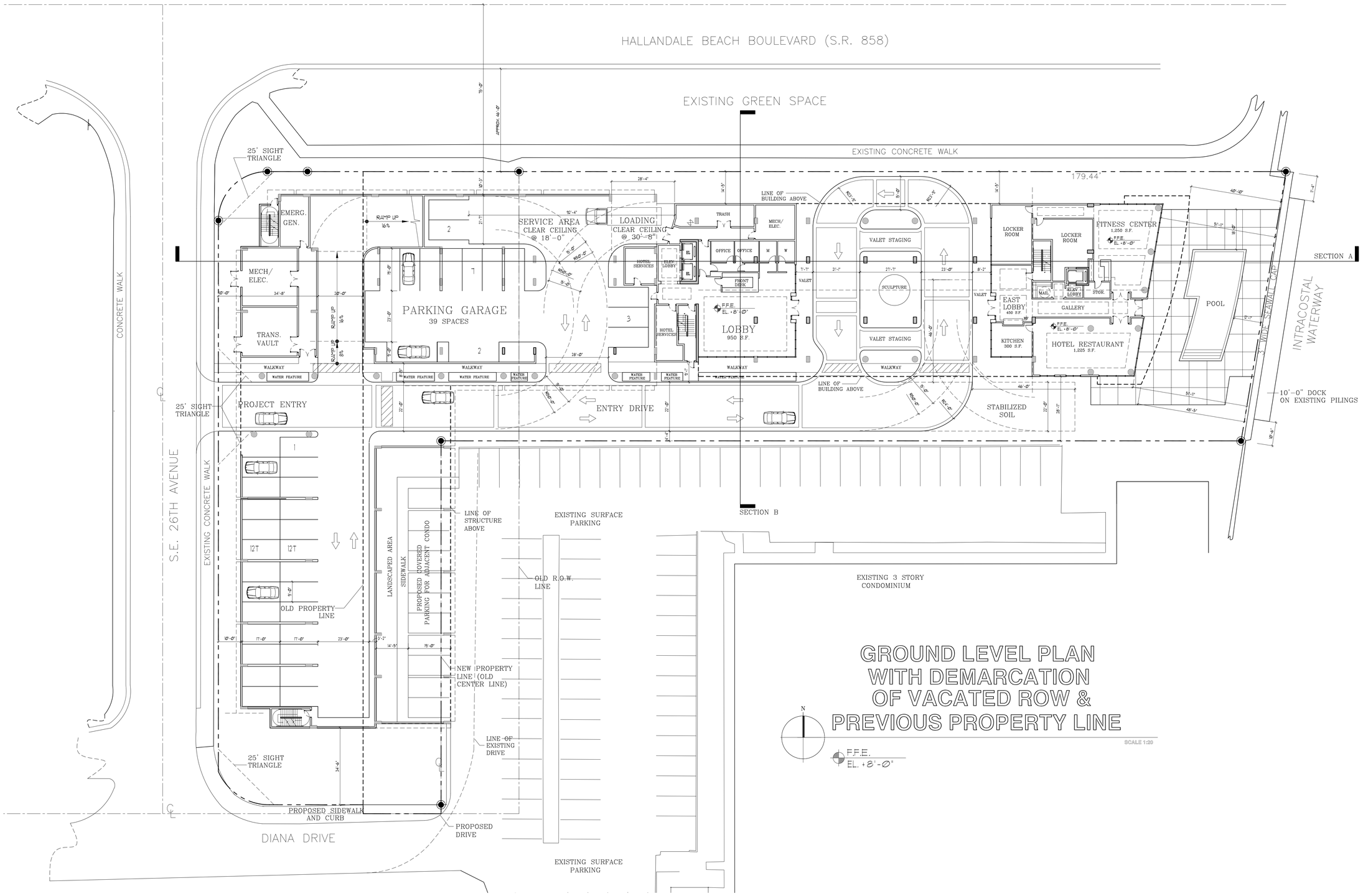

GROUND LEVEL PLAN WITH DEMARCATION OF VACATED ROW & PREVIOUS PROPERTY LINE

COHEN · FREEDMAN · ENCINOSA & ASSOC.
Architects, PA AA C000779
8085 N.W. 155th Street Miami Lakes, Florida 33016 305 826 3999

PRELIMINARY DESIGN FOR:
BEACHWALK
HALLANDALE BEACH, FLORIDA

revisions:

drawn by:

issue date: 07-15-11

sheet no: A.1

project: 3105

VIEW LOOKING SOUTHWEST

VIEW LOOKING SOUTHEAST

VIEW LOOKING NORTHWEST

COHEN · FREEDMAN · ENCINOSA & ASSOC.
Architects, PA AA C000779
8085 N.W. 155th Street Miami Lakes, Florida 33016 305 826 3999

PRELIMINARY DESIGN FOR:
BEACHWALK
HALLANDALE BEACH, FLORIDA

revisions:

drawn by:

issue date: 07-15-11

sheet no: A.10

project: 3105

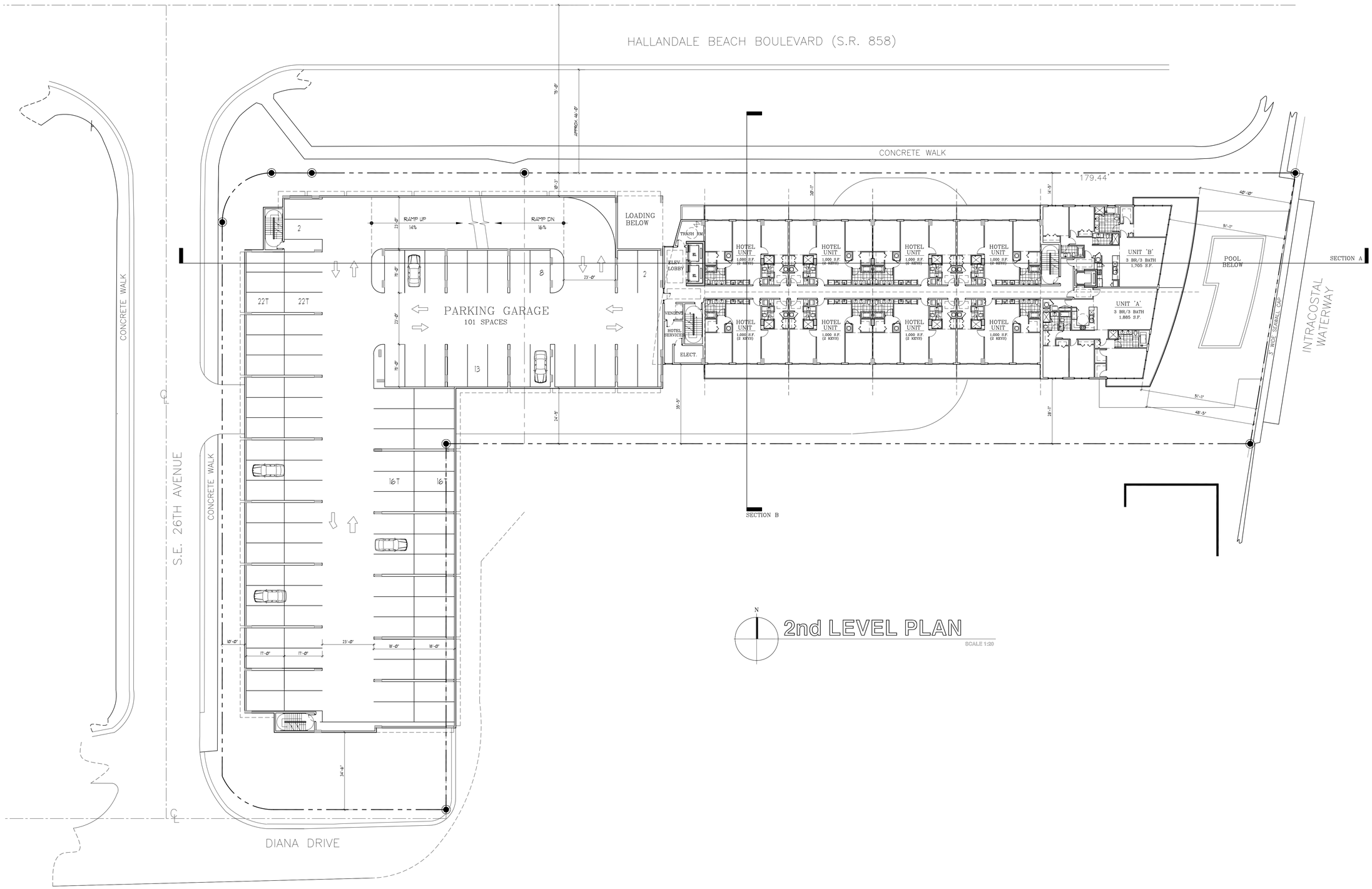

COHEN · FREEDMAN · ENCINOSA & ASSOC.
Architects, PA AA C000779
8085 N.W. 155th Street Miami Lakes, Florida 33016 305 826 3999

PRELIMINARY DESIGN FOR:
BEACHWALK
HALLANDALE BEACH, FLORIDA

revisions:

drawn by:

issue date: 07-15-11

sheet no: A.2

project: 3105

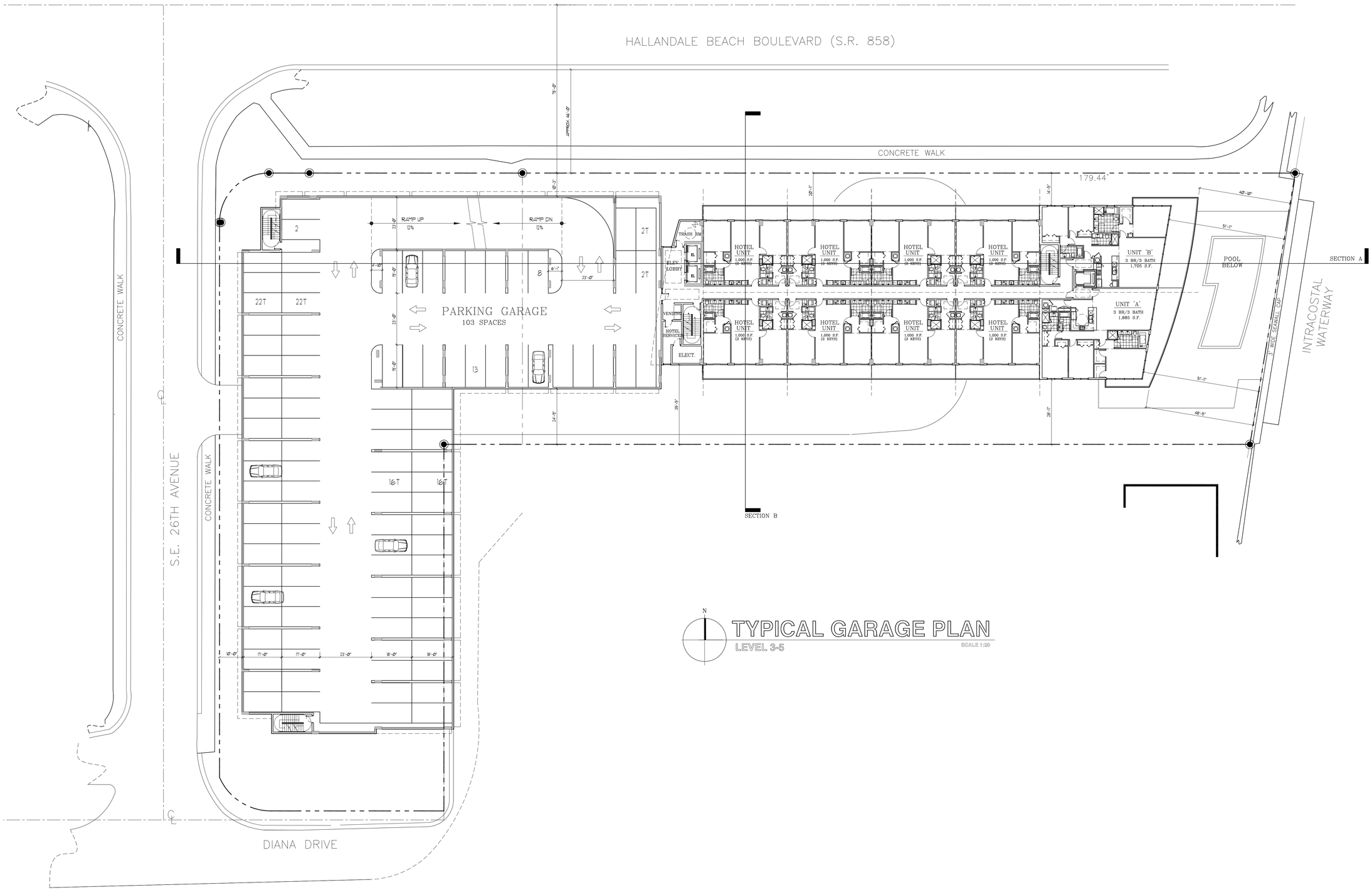

TYPICAL GARAGE PLAN

LEVEL 3-5

SCALE 1:20

COHEN · FREEDMAN · ENCINOSA & ASSOC.
Architects, PA AA C000779
8085 N.W. 155th Street Miami Lakes, Florida 33016 305 826 3999

PRELIMINARY DESIGN FOR:
BEACHWALK
HALLANDALE BEACH, FLORIDA

revisions:

drawn by:

issue date: 07-15-11

sheet no: A.3

project: 3105

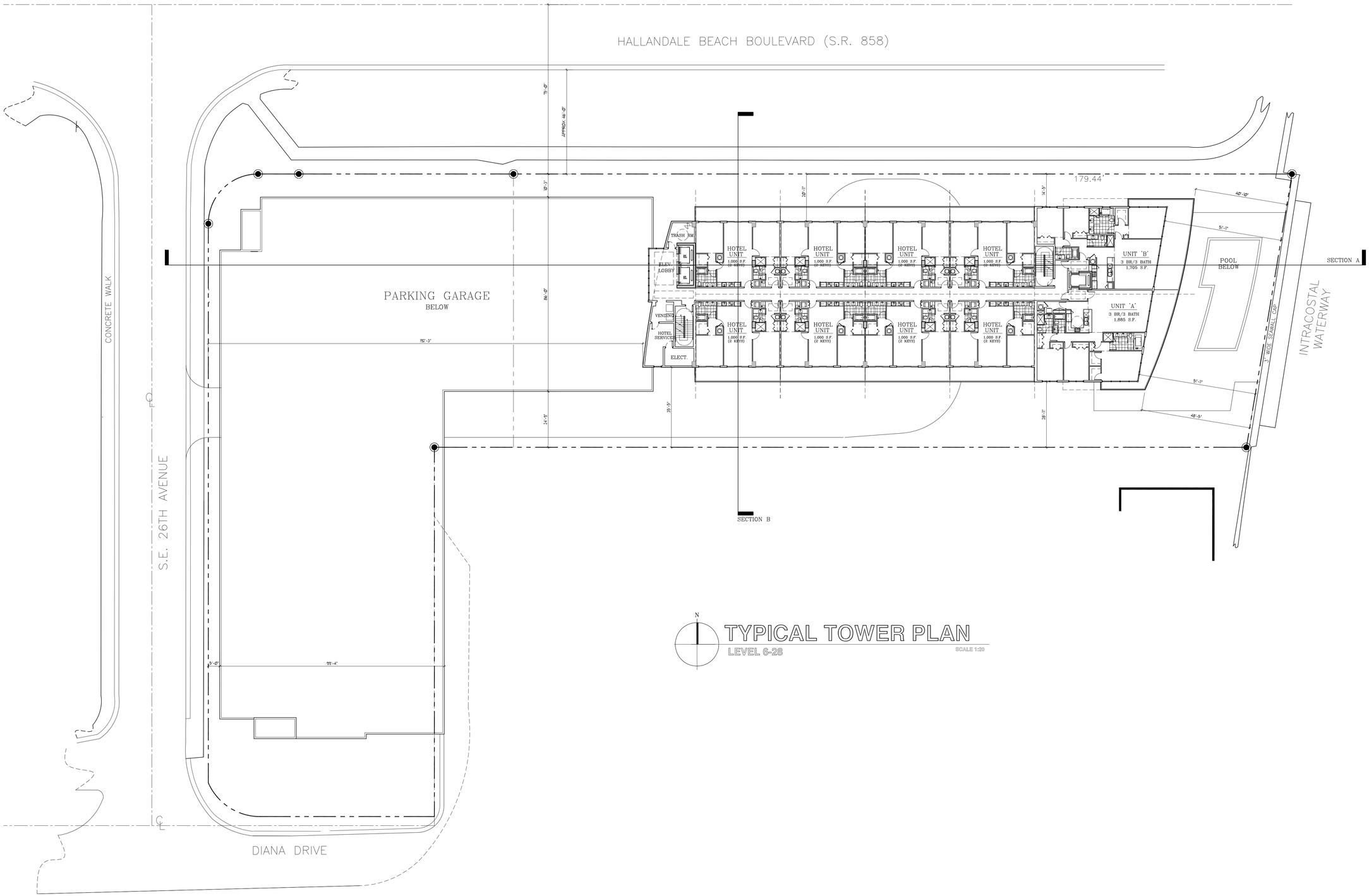

TYPICAL TOWER PLAN

LEVEL 6-26

SCALE 1:20

COHEN · FREEDMAN · ENCINOSA & ASSOC.
Architects, PA AA C000779
8085 N.W. 155th Street Miami Lakes, Florida 33016 305 826 3999

PRELIMINARY DESIGN FOR:
BEACHWALK
HALLANDALE BEACH, FLORIDA

revisions:

drawn by:

issue date: 07-15-11

sheet no: A.4

project: 3105

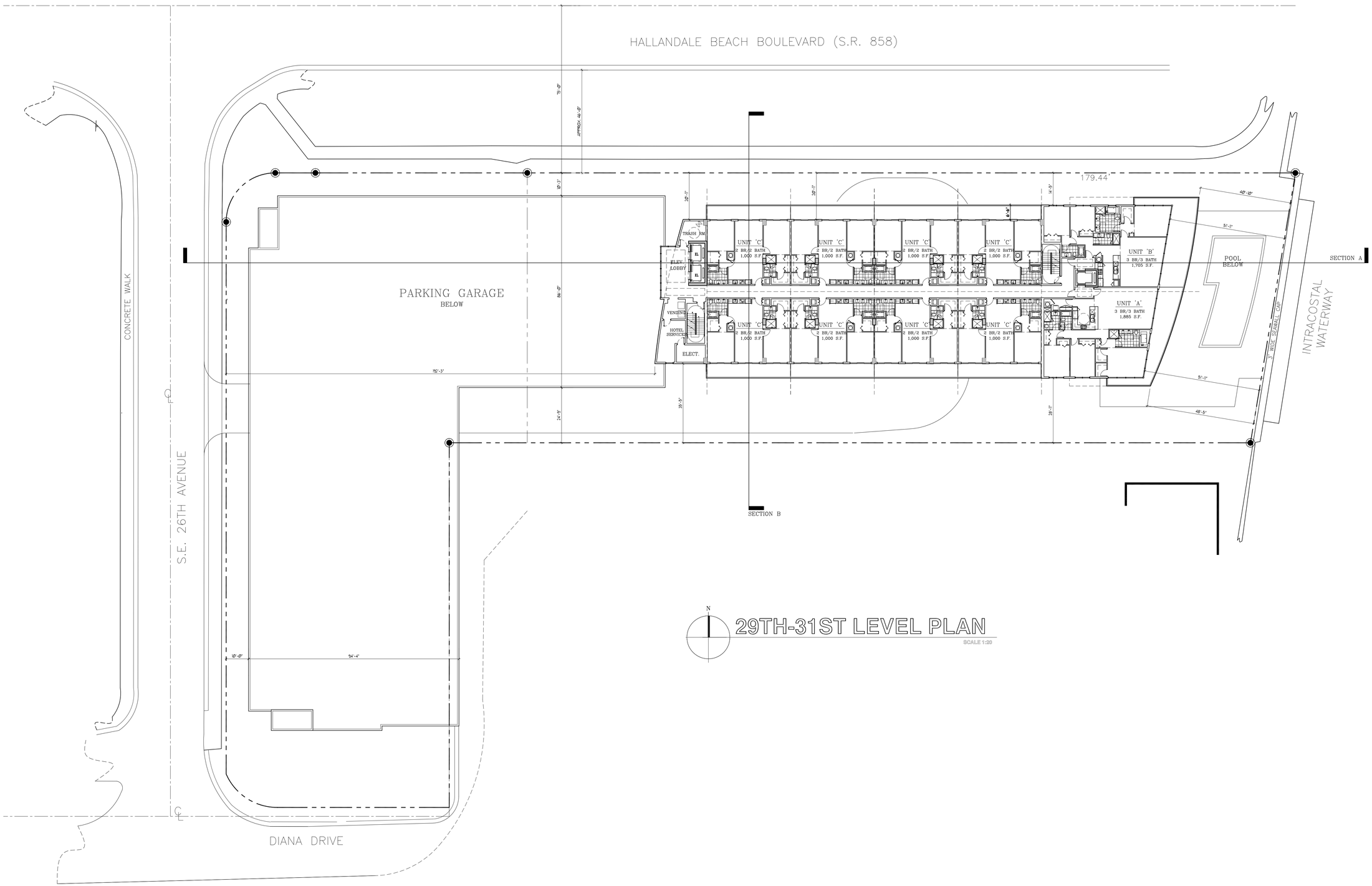

29TH-31ST LEVEL PLAN

SCALE 1:20

COHEN · FREEDMAN · ENCINOSA & ASSOC.
Architects, PA AA C000779
8085 N.W. 155th Street Miami Lakes, Florida 33016 305 826 3999

PRELIMINARY DESIGN FOR:
BEACHWALK
HALLANDALE BEACH, FLORIDA

revisions:

drawn by:

issue date: 07-15-11

sheet no: A.5

project: 3105

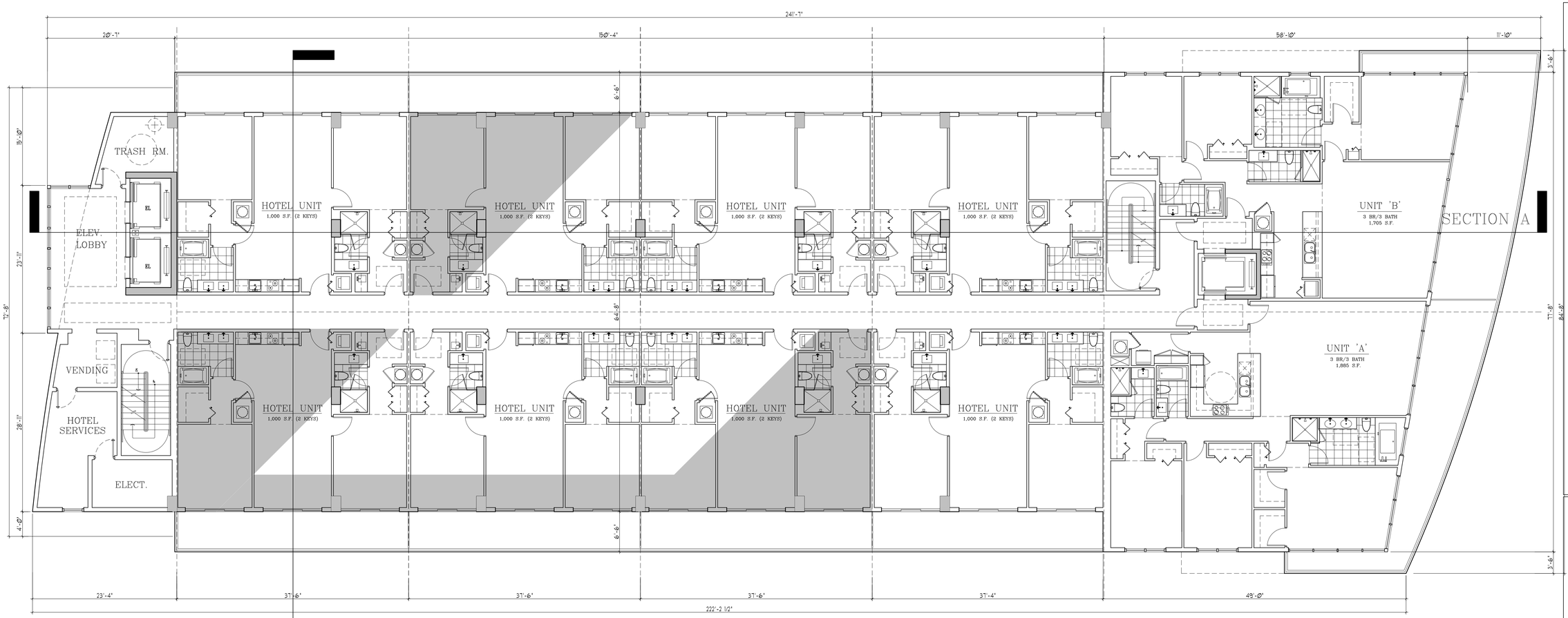

SECTION B

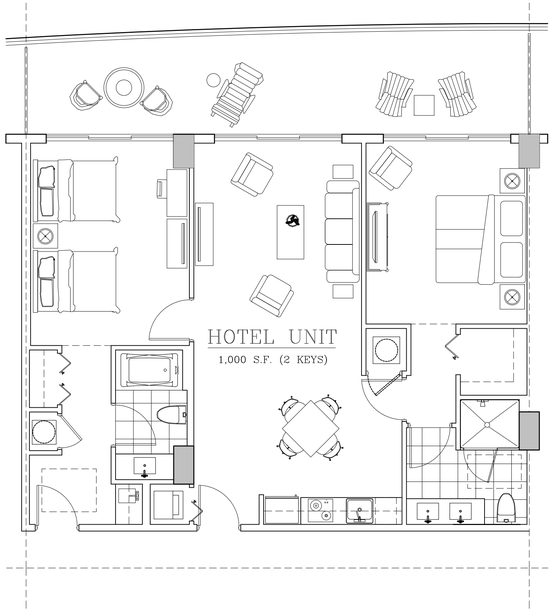

TYP HOTEL UNIT PLAN

LEVEL 7-28 1/4" SCALE

N

TYPICAL TOWER PLAN

LEVEL 7-28

1/8" SCALE

COHEN · FREEDMAN · ENCINOSA & ASSOC.
Architects, PA AA C000779
8085 N.W. 155th Street Miami Lakes, Florida 33016 305 826 3999

PRELIMINARY DESIGN FOR:
BEACHWALK
HALLANDALE BEACH, FLORIDA

revisions:

drawn by:

issue date: 07-15-11

sheet no: A.6

project: 3105

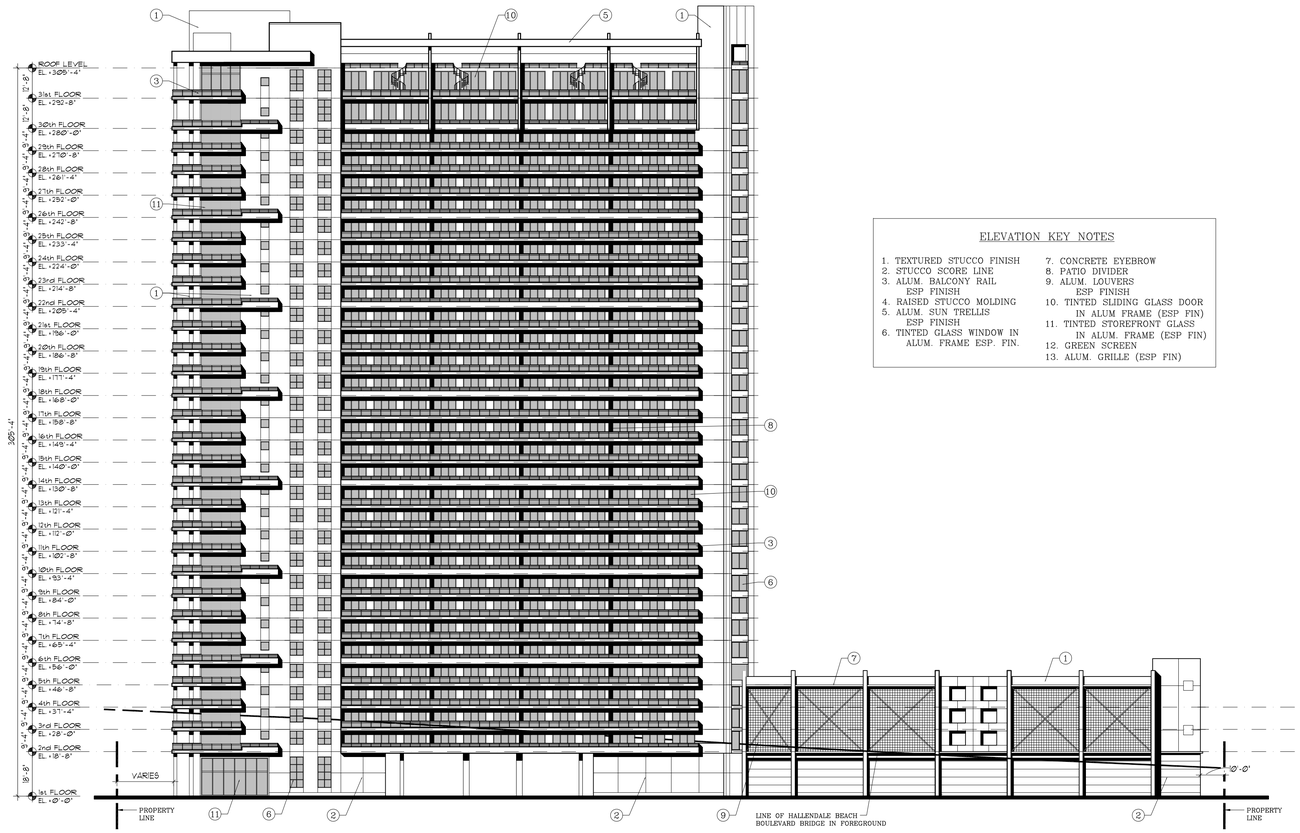

NORTH ELEVATION

SCALE 1:30

ELEVATION KEY NOTES

1. TEXTURED STUCCO FINISH
2. STUCCO SCORE LINE
3. ALUM. BALCONY RAIL ESP. FINISH
4. RAISED STUCCO MOLDING
5. ALUM. SUN TRELLIS ESP. FINISH
6. TINTED GLASS WINDOW IN ALUM. FRAME ESP. FIN.
7. CONCRETE EYEBROW
8. PATIO DIVIDER
9. ALUM. LOUVERS ESP. FINISH
10. TINTED SLIDING GLASS DOOR IN ALUM FRAME (ESP FIN)
11. TINTED STOREFRONT GLASS IN ALUM. FRAME (ESP FIN)
12. GREEN SCREEN
13. ALUM. GRILLE (ESP FIN)

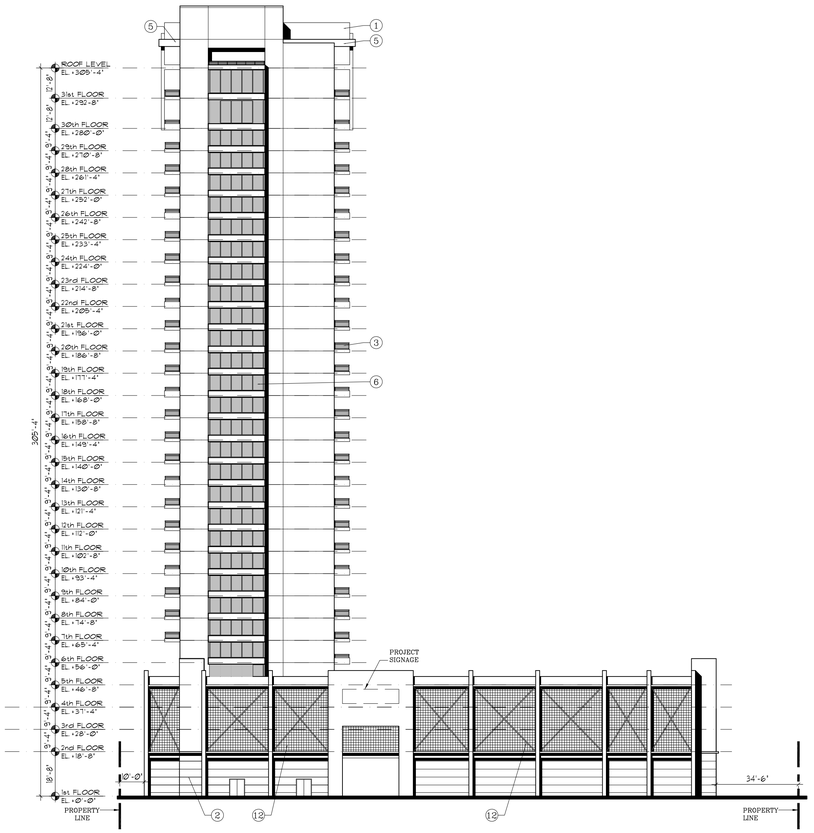

WEST ELEVATION

SCALE 1:30

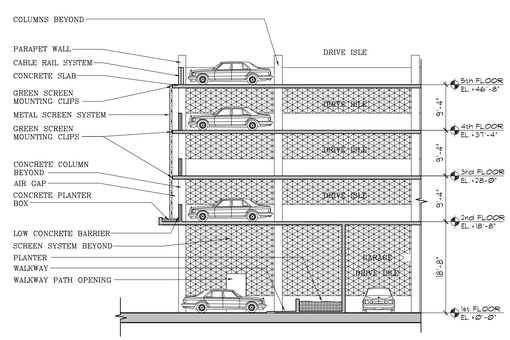

VERTICAL SECTION THRU EAST GARAGE ELEVATION

N.T.S.

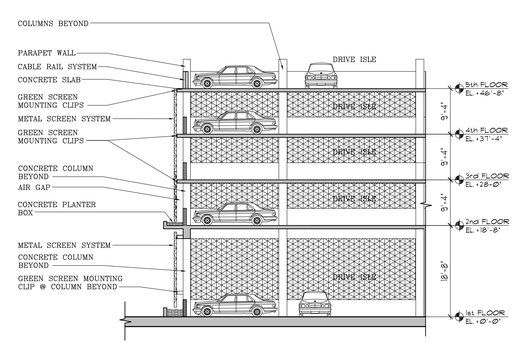

VERTICAL SECTION THRU NORTH-SOUTH-WEST GARAGE ELEVATION

N.T.S.

COHEN · FREEDMAN · ENCINOSA & ASSOC.
Architects, PA AA C000779
8085 N.W. 155th Street Miami Lakes, Florida 33016 305 826 3999

PRELIMINARY DESIGN FOR:
BEACHWALK
HALLANDALE BEACH, FLORIDA

revisions:

drawn by:

issue date: 07-15-11

sheet no: A.7

project: 3105

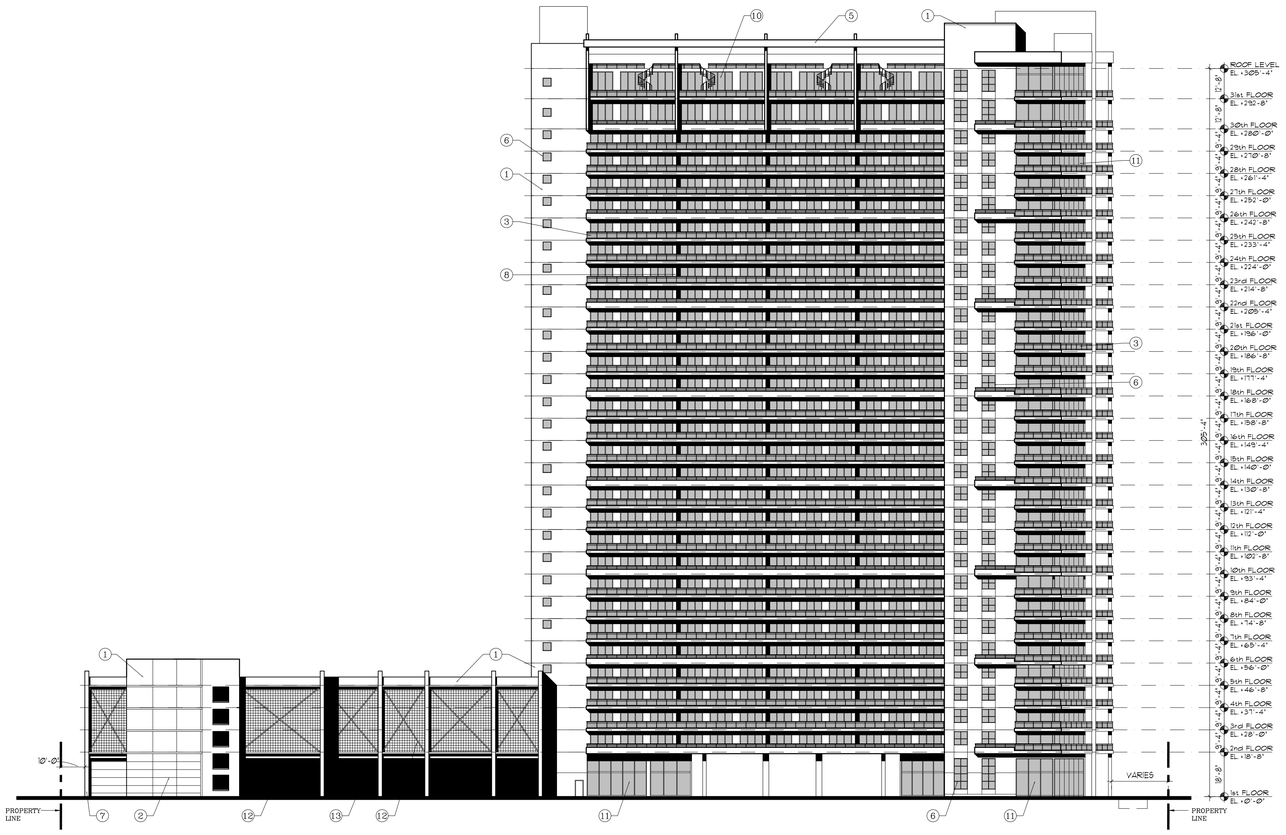

SOUTH ELEVATION

SCALE 1:30

ELEVATION KEY NOTES

1. TEXTURED STUCCO FINISH
2. STUCCO SCORE LINE
3. ALUM. BALCONY RAIL ESP FINISH
4. RAISED STUCCO MOLDING
5. ALUM. SUN TRELLIS ESP FINISH
6. TINTED GLASS WINDOW IN ALUM. FRAME ESP. FIN.
7. CONCRETE EYEBROW
8. PATIO DIVIDER
9. ALUM. LOUVERS ESP FINISH
10. TINTED SLIDING GLASS DOOR IN ALUM FRAME (ESP FIN)
11. TINTED STOREFRONT GLASS IN ALUM. FRAME (ESP FIN)
12. GREEN SCREEN
13. ALUM. GRILLE (ESP FIN)

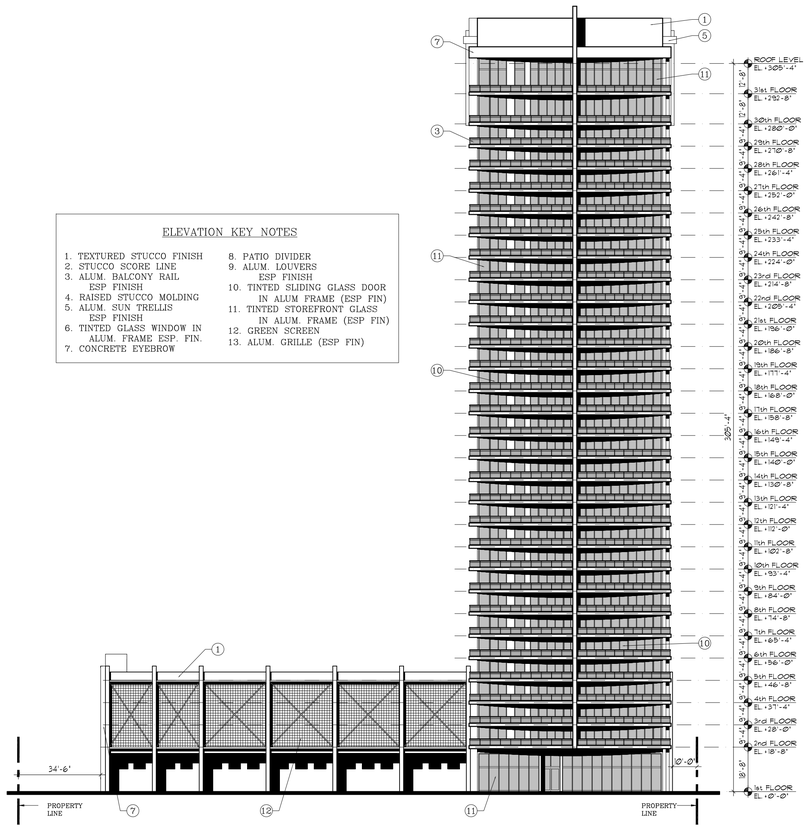

EAST ELEVATION

COHEN · FREEDMAN · ENCINOSA & ASSOC.
Architects, PA AA C000779
8085 N.W. 155th Street Miami Lakes, Florida 33016 305 826 3999

PRELIMINARY DESIGN FOR:
BEACHWALK
HALLANDALE BEACH, FLORIDA

revisions:

drawn by:

issue date: 07-15-11

sheet no: A.8

project: 3105

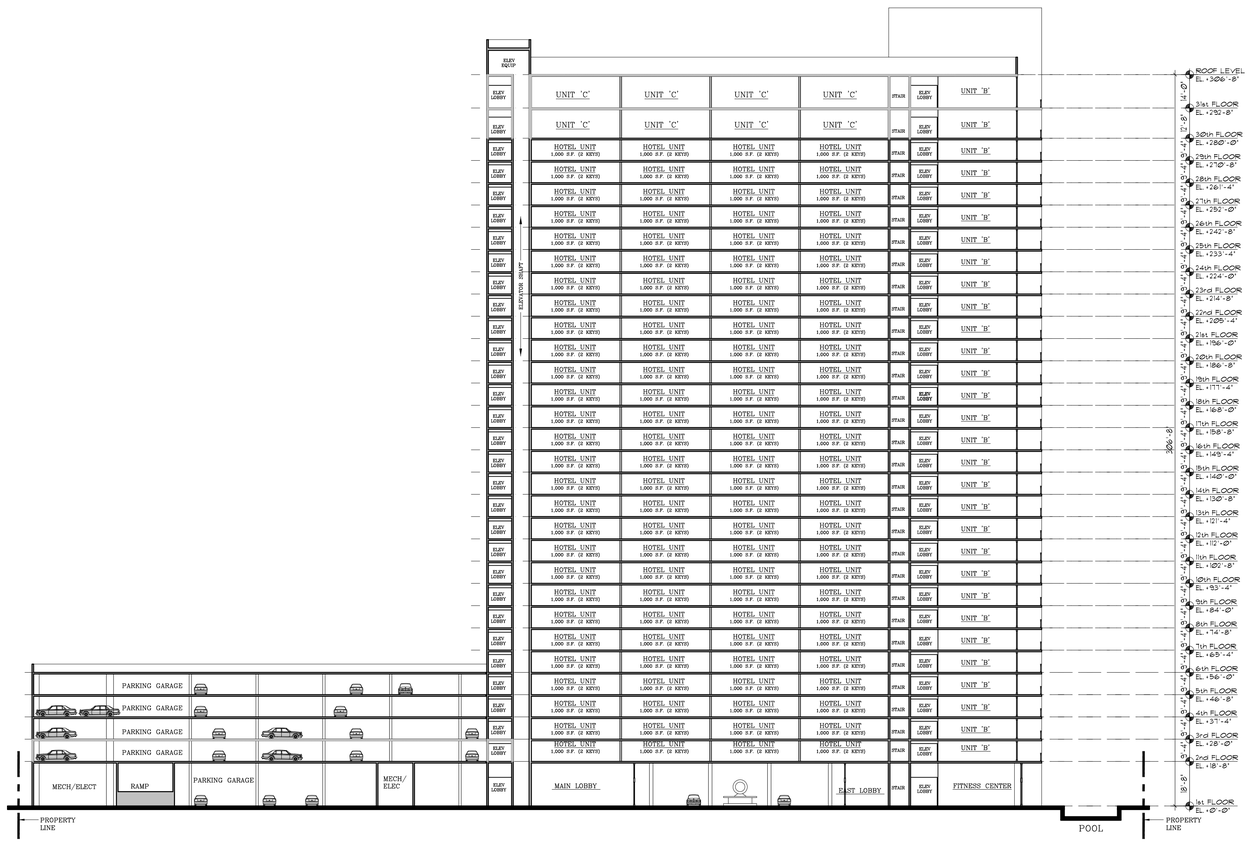

BUILDING SECTION A

SCALE 1:30

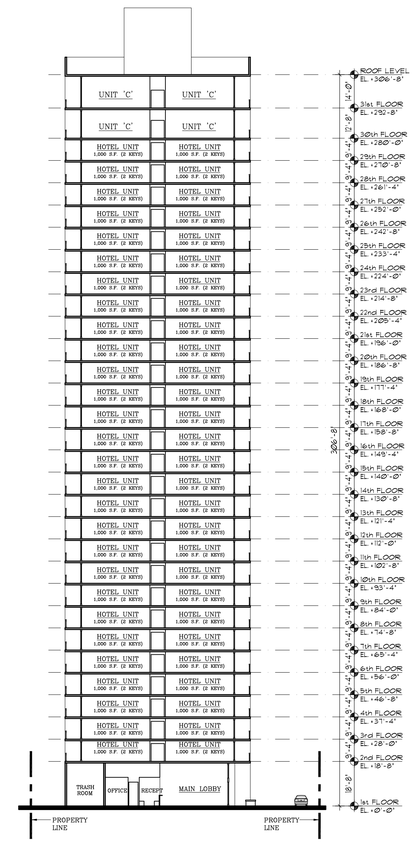

BUILDING SECTION B

SCALE 1:30

COHEN · FREEDMAN · ENCINOSA & ASSOC.
Architects, PA AA C000779
8085 N.W. 155th Street Miami Lakes, Florida 33016 305 826 3999

PRELIMINARY DESIGN FOR:

BEACHWALK

HALLANDALE BEACH, FLORIDA

revisions:

drawn by:

issue date: 07-15-11

sheet no: A.9

project: 3105

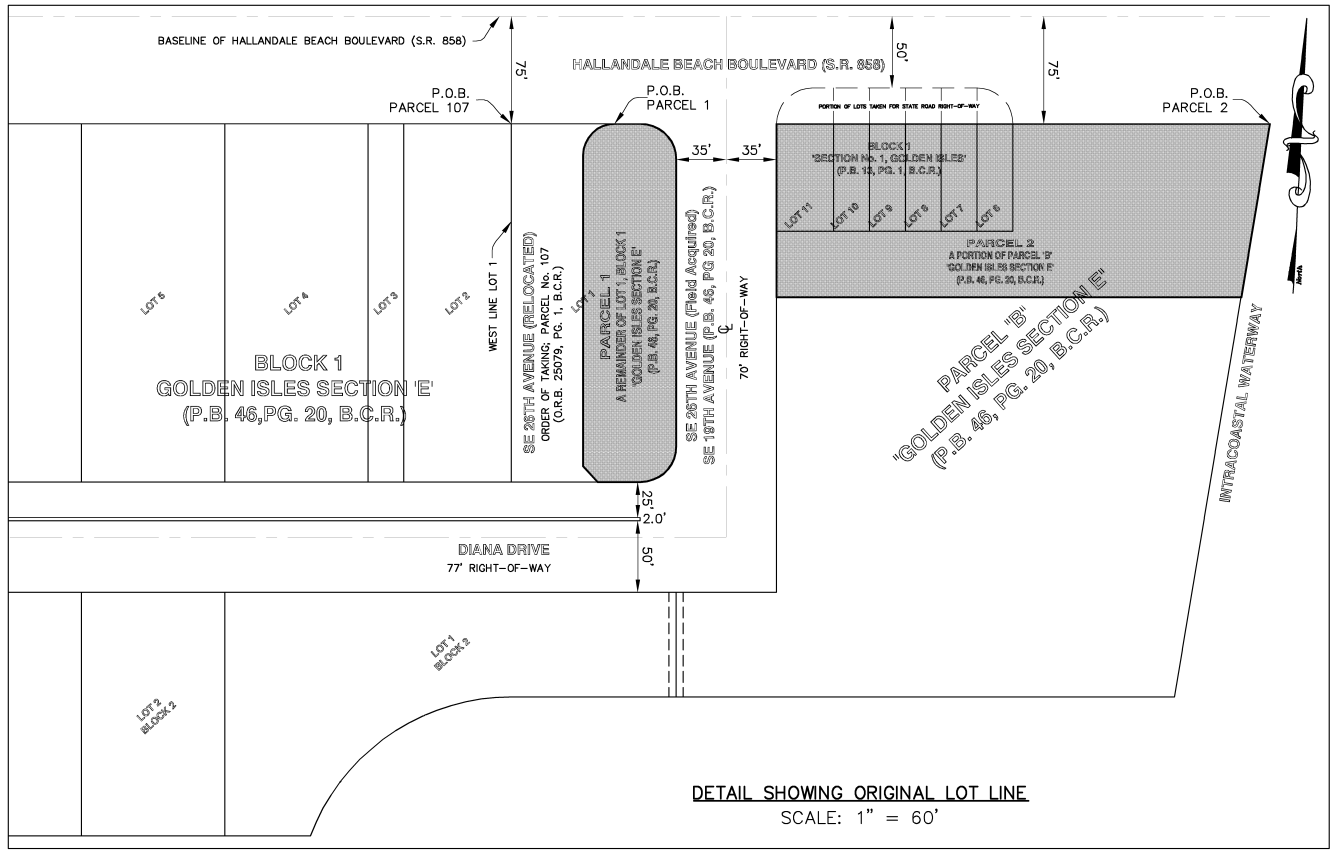

DETAIL SHOWING ORIGINAL LOT LINE
SCALE: 1" = 60'

First American Title Insurance Company - SCHEDULE B-II					
Agent File No.: (PRO PID 297901) (2076-2494717) Effective Date of March 25, 2011 at 8:00 a.m.					
ITEM No.	DESCRIPTIONS	RECORDING INSTRUMENT	AFFECTS/DOES NOT AFFECT	PLOTTABLE/ NOT PLOTTABLE	COMMENTS
10	Order certifying code enforcement fine and lien.	O.R.B. 46267, PG. 1447, B.C.R.	Affects	Not Plotted	
11	Sewerage and Water Agreement, filed February 12, 1958.	O.R.B. 1146, 174, B.C.R.	Affects	Not Plotted	Covers Lots 1 thru 29, Block 1
	Modified by Amendment to Agreement, filed June 2, 1958.	O.R.B. 1235, 406, B.C.R.	Affects	Not Plotted	Covers Lots 1 thru 29, Block 1
12	Riparian and/or littoral rights are not insured.				
13	Restrictions, dedications, conditions, reservations, easements and other matters shown on the plat of GOLDEN ISLES SECTION 1.	P.B. 13, PG. 1, B.C.R.	Affects	Plotted	

LEGAL DESCRIPTION: FROM SCHEDULE A OF TITLE COMMITMENT

LOT 1, IN BLOCK 1, OF GOLDEN ISLES SECTION 'E', ACCORDING TO THE PLAT THEREOF, RECORDED IN PLAT BOOK 46, PAGE 20, OF THE PUBLIC RECORDS OF BROWARD COUNTY, FLORIDA

TOGETHER WITH:

LOT 6, 7, 8, 9, 10, AND 11, IN BLOCK 1, OF SECTION NO. 1, GOLDEN ISLES, ACCORDING TO THE PLAT THEREOF, RECORDED IN PLAT BOOK 13, PAGE 1, OF THE PUBLIC RECORDS OF BROWARD COUNTY, FLORIDA, LESS STATE ROAD RIGHT-OF-WAY;

TOGETHER WITH:

THAT PART OF PARCEL B, OF GOLDEN ISLES SECTION 'E', AS RECORDED IN PLAT BOOK 46, PAGE 20, OF THE PUBLIC RECORDS OF BROWARD COUNTY, FLORIDA, MORE PARTICULARLY DESCRIBED AS FOLLOWS:

BEGINNING AT THE NORTHEAST CORNER OF SAID PARCEL 'B', RUN WESTERLY AND ALONG THE SOUTH RIGHT-OF-WAY OF HALLANDALE BEACH BOULEVARD, 179.44 FEET TO A POINT ON THE EAST LINE OF LOT 6, BLOCK 1, SECTION NO. 1 GOLDEN ISLES, PLAT BOOK 13, PAGE 1, OF THE PUBLIC RECORDS BROWARD COUNTY, FLORIDA; THENCE RUN SOUTHERLY AND ALONG THE EAST LINE OF SAID LOT 6, BLOCK 1, SECTION NO. 1, GOLDEN ISLES, 75.00 FEET; THENCE RUN WESTERLY AND ALONG THE SOUTH LINE OF SAID LOTS 6, 7, 8, 9, 10, AND 11, BLOCK 1, SECTION NO. 1, GOLDEN ISLES, 165.00 FEET; THENCE RUN SOUTHERLY AND ALONG THE WEST LINE OF SAID PARCEL 'B', 46.00 FEET; THENCE RUN EASTERLY AND PARALLEL WITH THE NORTH LINE OF SAID PARCEL 'B', 324.30 FEET TO A POINT OF INTERSECTION WITH THE WESTERLY RIGHT-OF-WAY OF THE INTRACOASTAL WATERWAY; THENCE NORTHERLY AND ALONG SAID WESTERLY RIGHT-OF-WAY OF THE INTRACOASTAL WATERWAY (SAID LINE ALSO BEING THE EASTERLY LINE OF SAID PARCEL 'B'), A DISTANCE OF 122.66 FEET TO THE NORTHEAST CORNER OF SAID PARCEL 'B' AND THE POINT OF BEGINNING.

LESS AND EXCEPT THE LANDS DESCRIBED AS PARCEL NO. 107, AS CONTAINED IN THE STIPULATED ORDER OF TAKING AND FINAL JUDGMENT RECORDED IN OFFICIAL RECORDS BOOK 25079, PAGE 1, OF THE PUBLIC RECORDS OF BROWARD COUNTY, FLORIDA.

ALSO KNOWN AS:

PARCEL 1:

THAT PART OF LOT 1 IN BLOCK 1 OF GOLDEN ISLES SECTION 'E' IN THE SOUTHWEST 1/4 OF THE NORTHEAST 1/4 OF SECTION 26, TOWNSHIP 51 SOUTH, RANGE 42 EAST, ACCORDING TO THE PLAT THEREOF AS RECORDED IN PLAT BOOK 46, PAGE 20 OF THE PUBLIC RECORDS OF BROWARD COUNTY, FLORIDA;

LESS AND EXCEPT THE FOLLOWING DESCRIBED PARCEL NO. 107, AS CONTAINED IN THE STIPULATED ORDER OF TAKING AND FINAL JUDGMENT RECORDED IN OFFICIAL RECORDS BOOK 25079, PAGE 1, OF THE PUBLIC RECORDS OF BROWARD COUNTY, FLORIDA;

THAT PART OF LOT 1 IN BLOCK 1 OF GOLDEN ISLES SECTION 'E' IN THE SOUTHWEST 1/4 OF THE NORTHEAST 1/4 OF SECTION 26, TOWNSHIP 51 SOUTH, RANGE 42 EAST, ACCORDING TO THE PLAT THEREOF AS RECORDED IN PLAT BOOK 46, PAGE 20 OF THE PUBLIC RECORDS OF BROWARD COUNTY, FLORIDA; SAID PART BEING MORE PARTICULARLY DESCRIBED AS FOLLOWS:

COMMENCE AT THE SOUTHWEST CORNER OF THE NORTHWEST 1/4 OF THE NORTHEAST 1/4 OF SAID SECTION 26; THENCE NORTH 87°08'38" EAST ALONG THE BASELINE OF SURVEY FOR STATE ROAD 858 (HALLANDALE BEACH BOULEVARD), (SECTION 86200-2514), A DISTANCE OF 777.95 FEET; THENCE SOUTH 02°51'22" EAST, A DISTANCE OF 75.00 FEET (75.03 FEET, FIELD) TO THE NORTHWEST CORNER OF SAID LOT 1 IN BLOCK 1 OF GOLDEN ISLES SECTION 'E', SAID POINT ALSO BEING THE POINT OF BEGINNING; THENCE NORTH 87°08'38" EAST ALONG THE NORTHERLY BOUNDARY OF SAID LOT 1, ALSO BEING THE SOUTHERLY EXISTING RIGHT-OF-WAY LINE FOR SAID STATE ROAD 858, A DISTANCE OF 72.00 FEET TO A POINT ON A CURVE CONCAVE TO THE SOUTHEASTERLY AND HAVING A CHORD BEARING OF SOUTH 42°08'38" WEST; THENCE SOUTHWESTERLY ALONG THE ARC OF SAID CURVE, HAVING A RADIUS OF 22.00 FEET, AN ARC DISTANCE OF 34.56 FEET, THROUGH A CENTRAL ANGLE OF 90°00'00" TO THE END OF SAID CURVE; THENCE SOUTH 02°51'22" EAST, A DISTANCE OF 217.00 FEET; THENCE SOUTH 45°17'32" EAST, A DISTANCE OF 14.90 FEET TO A POINT ON THE SOUTHERLY BOUNDARY OF SAID LOT 1 IN BLOCK 1 OF GOLDEN ISLES SECTION "E"; THENCE SOUTH 87°08'38" WEST ALONG SAID SOUTHERLY BOUNDARY, A DISTANCE OF 60.06 FEET TO THE SOUTHWEST CORNER OF SAID LOT 1; THENCE NORTH 02°51'22" WEST ALONG THE WESTERLY BOUNDARY OF SAID LOT 1, A DISTANCE OF 250.00 FEET TO THE POINT OF BEGINNING.

SAID PARCEL 1 BEING MORE PARTICULARLY DESCRIBED BY METES AND BOUNDS:

COMMENCE AT THE NORTHWEST CORNER OF SAID LOT 1, BLOCK 1 OF GOLDEN ISLES SECTION 'E' IN THE SOUTHWEST 1/4 OF THE NORTHEAST 1/4 OF SECTION 26, TOWNSHIP 51 SOUTH, RANGE 42 EAST, ACCORDING TO THE PLAT THEREOF AS RECORDED IN PLAT BOOK 46, PAGE 20 OF THE PUBLIC RECORDS OF BROWARD COUNTY, FLORIDA;
THENCE NORTH 87°08'38" EAST ON THE NORTH BOUNDARY LINE OF SAID LOT 1, ALSO BEING THE SOUTHERLY EXISTING RIGHT-OF-WAY LINE FOR STATE ROAD 858 (HALLANDALE BEACH BOULEVARD), (SECTION 86200-2514), A DISTANCE OF 72.00 FEET TO THE POINT OF BEGINNING;

THENCE CONTINUE NORTH 87°08'38" EAST ON SAID NORTH LINE, A DISTANCE OF 18.00 FEET TO A POINT ON THE ARC OF A TANGENT CURVE TO THE RIGHT;

THENCE SOUTHEASTERLY, ON THE ARC OF SAID CURVE, HAVING A RADIUS OF 25.00 FEET, A CENTRAL ANGLE OF 90°00'00", AND AN ARC DISTANCE OF 39.27 FEET TO A POINT OF TANGENCY ON THE EAST BOUNDARY LINE OF SAID LOT 1;

THENCE SOUTH 02°51'22" EAST ON SAID EAST LINE, A DISTANCE OF 200.00 FEET TO A POINT ON THE ARC OF A TANGENT CURVE TO THE RIGHT;

THENCE SOUTHWESTERLY, ON THE ARC OF SAID CURVE, HAVING A RADIUS OF 25.00 FEET, A CENTRAL ANGLE OF 90°00'00", AND AN ARC DISTANCE OF 39.27 FEET TO A POINT OF TANGENCY ON THE SOUTH LINE OF SAID LOT 1;

THENCE SOUTH 87°08'38" WEST ON SAID SOUTH LINE, A DISTANCE OF 29.94 FEET;

THENCE NORTH 45°17'32" WEST, A DISTANCE OF 14.90 FEET TO THE EAST LINE OF PARCEL NO. 107, AS CONTAINED IN THE STIPULATED ORDER OF TAKING AND FINAL JUDGMENT RECORDED IN OFFICIAL RECORDS BOOK 25079, PAGE 1, OF THE PUBLIC RECORDS OF BROWARD COUNTY, FLORIDA;

THENCE NORTH 02°51'22" WEST ON SAID EAST LINE, A DISTANCE OF 217.00 FEET TO A POINT ON THE ARC OF A TANGENT CURVE TO THE RIGHT;

THENCE NORTHEASTERLY, ON THE ARC OF SAID CURVE, HAVING A RADIUS OF 22.00 FEET, A CENTRAL ANGLE OF 90°00'00", AND AN ARC DISTANCE OF 34.56 FEET TO THE POINT OF BEGINNING;

PARCEL 2:

LOT 6, 7, 8, 9, 10, AND 11, IN BLOCK 1, OF GOLDEN ISLES SECTION NO. 1, ACCORDING TO THE PLAT THEREOF, RECORDED IN PLAT BOOK 13, PAGE 1, OF THE PUBLIC RECORDS OF BROWARD COUNTY, FLORIDA, LESS STATE ROAD RIGHT-OF-WAY;

TOGETHER WITH:

THAT PART OF PARCEL B, OF GOLDEN ISLES SECTION E, AS RECORDED IN PLAT BOOK 46, PAGE 20, OF THE PUBLIC RECORDS OF BROWARD COUNTY, FLORIDA, MORE PARTICULARLY DESCRIBED AS FOLLOWS:

BEGINNING AT THE NORTHEAST CORNER OF SAID PARCEL 'B', RUN WESTERLY AND ALONG THE SOUTH RIGHT-OF-WAY OF HALLANDALE BEACH BOULEVARD, 179.44 FEET TO A POINT ON THE EAST LINE OF LOT 6, BLOCK 1, GOLDEN ISLES SECTION No. 1, PLAT BOOK 13, PAGE 1, OF THE PUBLIC RECORDS BROWARD COUNTY, FLORIDA; THENCE RUN SOUTHERLY AND ALONG THE EAST LINE OF SAID LOT 6, BLOCK 1, GOLDEN ISLES SECTION No. 1, 75.00 FEET; THENCE RUN WESTERLY AND ALONG THE SOUTH LINE OF SAID LOTS 6, 7, 8, 9, 10, AND 11, BLOCK 1, GOLDEN ISLES SECTION No. 1, 165.00 FEET; THENCE RUN SOUTHERLY AND ALONG THE WEST LINE OF SAID PARCEL 'B', 46.00 FEET; THENCE RUN EASTERLY AND PARALLEL WITH THE NORTH LINE OF SAID PARCEL 'B', 324.30 FEET TO A POINT OF INTERSECTION WITH THE WESTERLY RIGHT-OF-WAY OF THE INTRACOASTAL WATERWAY; THENCE NORTHERLY AND ALONG SAID WESTERLY RIGHT-OF-WAY OF THE INTRACOASTAL WATERWAY (SAID LINE ALSO BEING THE EASTERLY LINE OF SAID PARCEL 'B'), A DISTANCE OF 122.66 FEET TO THE NORTHEAST CORNER OF SAID PARCEL 'B' AND THE POINT OF BEGINNING.

SAID LANDS LYING AND BEING IN THE CITY OF HALLANDALE BEACH, BROWARD COUNTY, FLORIDA AND CONTAINING A TOTAL NET AREA OF 56,280 SQUARE FEET (1.292 ACRES) MORE OR LESS.

SURVEYOR'S NOTES:

1. NOT VALID WITHOUT THE SIGNATURE AND ORIGINAL RAISED SEAL OF A FLORIDA LICENSED SURVEYOR AND MAPPER.
2. LANDS SHOWN HEREON WERE NOT ABSTRACTED, BY THE SURVEYOR, FOR RIGHTS-OF-WAY, EASEMENTS, OWNERSHIP OR OTHER INSTRUMENTS OF RECORD. THIS SURVEY WAS PERFORMED WITH THE BENEFIT OF COMMITMENT FOR TITLE INSURANCE PREPARED BY FIRST AMERICAN TITLE INSURANCE COMPANY UNDER AGENT FILE NUMBER (PRO PID 297901) (2076-2494717) AND DATED MARCH 25, 2011 AT 8:00 A.M..
3. UNLESS OTHERWISE NOTED, THIS FIRM HAS NOT ATTEMPTED TO LOCATE UNDERGROUND UTILITIES, TO DELINEATE ANY POSSIBLE WETLANDS, FOOTINGS AND/OR FOUNDATIONS.
4. THE LEGAL DESCRIPTION SHOWN HEREON WAS PROVIDED BY THE CLIENT.
5. BEARINGS SHOWN HEREON ARE RELATIVE TO THE SOUTH RIGHT-OF-WAY LINE OF STATE ROAD 858 (HALLANDALE BEACH BOULEVARD); HAVING A BEARING OF NORTH 87°08'38" EAST AS SHOWN ON STATE OF FLORIDA DEPARTMENT OF TRANSPORTATION RIGHT-OF-WAY MAP FOR STATE ROAD 858 SECTION 86200-2514.
6. THE WATER MAIN ALONG NORTH PROPERTY LINE WAS LOCATED BY SOFT DIG METHODS ON 08-10-06.
7. THERE IS A GAS LINE, WATER LINE AND A SANITARY SEWER LINE AS EVIDENCED BY GATE VALVES AND SANITARY SEWER MANHOLES WITHIN THE PLATTED RIGHT-OF-WAY OF S.E. 26th AVENUE (S.E. 19th AVENUE AS SHOWN ON PLAT BOOK 46, PAGE 20, BROWARD COUNTY RECORDS).
8. FLOOD ZONE LINE SHOWN HEREON ARE APPROXIMATED AND WERE SCALED FROM CURRENT BROWARD COUNTY, FLORIDA F.E.M.A. (FEDERAL EMERGENCY MANAGEMENT AGENCY) FLOOD INFORMATION RATE MAP.
9. FLOOD ZONE INFORMATION
   COMMUNITY NAME: CITY OF HALLANDALE
   COMMUNITY NUMBER: 125110
   COUNTY NAME: BROWARD COUNTY
   STATE: FLORIDA
   MAP & PANEL NUMBER: 12011C0319
   SUFFIX: F
   F.I.R.M. INDEX DATE: 10-02-97
   F.I.R.M. PANEL EFFECTIVE DATE: 08-18-92
   FLOOD ZONE: AE
   BASE FLOOD ELEVATION: 7 & 9

THIS SURVEY IS CERTIFIED TO:

PRH-2600 HALLANDALE BEACH, LLC, A FLORIDA LIMITED LIABILITY COMPANY
FIRST AMERICAN TITLE INSURANCE COMPANY
KLEIN & KLEIN, LLC
GREENBERG TRAURIG, P.A.

SURVEYOR'S CERTIFICATE:

I HEREBY CERTIFY: THAT THIS "BOUNDARY/TOPOGRAPHIC/TREE SURVEY" OF THE PROPERTY DESCRIBED HEREON IS TRUE AND CORRECT TO THE BEST OF MY KNOWLEDGE AND BELIEF AS RECENTLY SURVEYED AND DRAWN UNDER MY SUPERVISION. THIS SKETCH COMPLIES WITH THE MINIMUM TECHNICAL STANDARDS SET FORTH BY THE FLORIDA STATE BOARD OF PROFESSIONAL SURVEYORS AND MAPPERS IN CHAPTER 5J17-050, FLORIDA ADMINISTRATIVE CODE, PURSUANT TO CHAPTER 472.027, FLORIDA STATUTES.

DATE OF LAST FIELD WORK: JUNE 28, 2011

CALVIN, GIORDANO & ASSOCIATES, INC.

SIGNED:_____ DATED_____
GREGORY J. CLEMENTS
PROFESSIONAL SURVEYOR AND MAPPER
FLORIDA REGISTRATION NO. 4479

FIELD BOOK/PAGE 810/61, DATE 03-29-2011
FIELD BOOK WPB P-51/10-17, 28 DATE 07-20-2006

NO	DATE	REVISION	BY	NO	DATE	REVISION	BY
5	03-29-11	UPDATED BOUNDARY SURVEY AND ADDED TITLE WORK	LMK	10	09-19-11	UPDATE SURVEY	GYC
4	01-11-07	ADD R/W TO BE VACATED	E.T.V.	9	06-28-11	ADD FLOOD ZONE LINE & ADJ. IMPROVEMENTS	GYC
3	09-11-06	REVISE S.R. IDENTIFICATION NUMBER	E.T.V.	8	06-20-11	UPDATE SURVEY	GYC
2	08-31-06	ADD AREA AND FLOOD INFORMATION	E.T.V.	7	04-20-11	REVISE TABLE PER NEW TITLE COMMITMENT	AP
1	08-15-06	ADD WATER MAIN LOCATION AND ELEVATIONS	E.T.V.	6	04-12-11	REVISE PARCEL 1 LEGAL DESCRIPTION	GYC

DESIGNED DATE
DRAWN DATE
CHECKED DATE

Calvin, Giordano & Associates, Inc.
EXCEPTIONAL SOLUTIONS
1800 Eller Drive, Suite 600, Fort Lauderdale, Florida 33316
Phone: 954.921.7781 Fax: 954.921.8807
Certificate of Authorization 6791

PORTION OF GOLDEN ISLES-SECTION E
SECTION 26, TOWNSHIP 51S, RANGE 42E
CITY OF HALLANDALE BEACH

BOUNDARY / TOPOGRAPHIC
TREE SURVEY
BROWARD COUNTY, FLORIDA

APPROVED:
DATE:

SCALE 1" = 30'
PROJECT No 11-4216
CAD FILE 11-L-44
SHEET 1 OF 2

P:\Projects\2011\114216 Related Group - Monaro Site Plan\Survey\SKETCH\114216-V-BS-RPC-W-ADJN.dwg

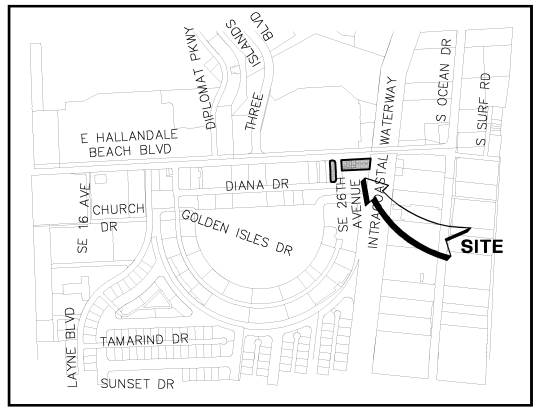

LOCATION MAP
NOT TO SCALE

GRAPHIC SCALE
30 0 15 30 60 120
(IN FEET)
1 inch = 30 ft.

SYMBOL LEGEND	
BELLSOUTH MANHOLE	
WOOD POWER POLE	
CONCRETE POWER POLE	
LIGHT POLE	
GUY ANCHOR	
MISCELLANEOUS SIGN	
FLORIDA POWER & LIGHT MANHOLE	
FLAG POLE	
IRRIGATION VALVE	
GATE VALVE	
SANITARY MANHOLE	
FIRE HYDRANT	
STREET LIGHT HANDHOLE	
WATER METER	
CATCH BASIN	
ELECTRIC HANDHOLE	
MONITORING WELL	
STORM MANHOLE	
CLEAN-OUT	
METAL LIGHT POLE	

LEGEND:

B.C.R.	BROWARD COUNTY RECORDS
℄	CENTERLINE
CB	CHORD BEARING
CONC	CONCRETE
DIP	DUCTILE IRON PIPE
EL.	ELEVATION
FND	FOUND
FT	FEET
INV	INVERT
IR	IRON ROD
IRC	IRON ROD & CAP
LB	LICENSED BUSINESS
NO.	NUMBER
N&D	NAIL AND DISK
ORB	OFFICIAL RECORDS BOOK
P.B.	PLAT BOOK
PG.	PAGE
R/W	RIGHT-OF-WAY
SQ	SQUARE
(R)	RECORDED
(C)	CALCULATED
(TYP)	TYPICAL
OW	OVERHEAD WIRES
X	CHAIN LINK FENCE
	GUARDRAIL
xWM	EXISTING WATER MAIN
xSTRM	EXISTING STORM PIPE
xSAN	EXISTING SEWER
xG	EXISTING GAS LINE

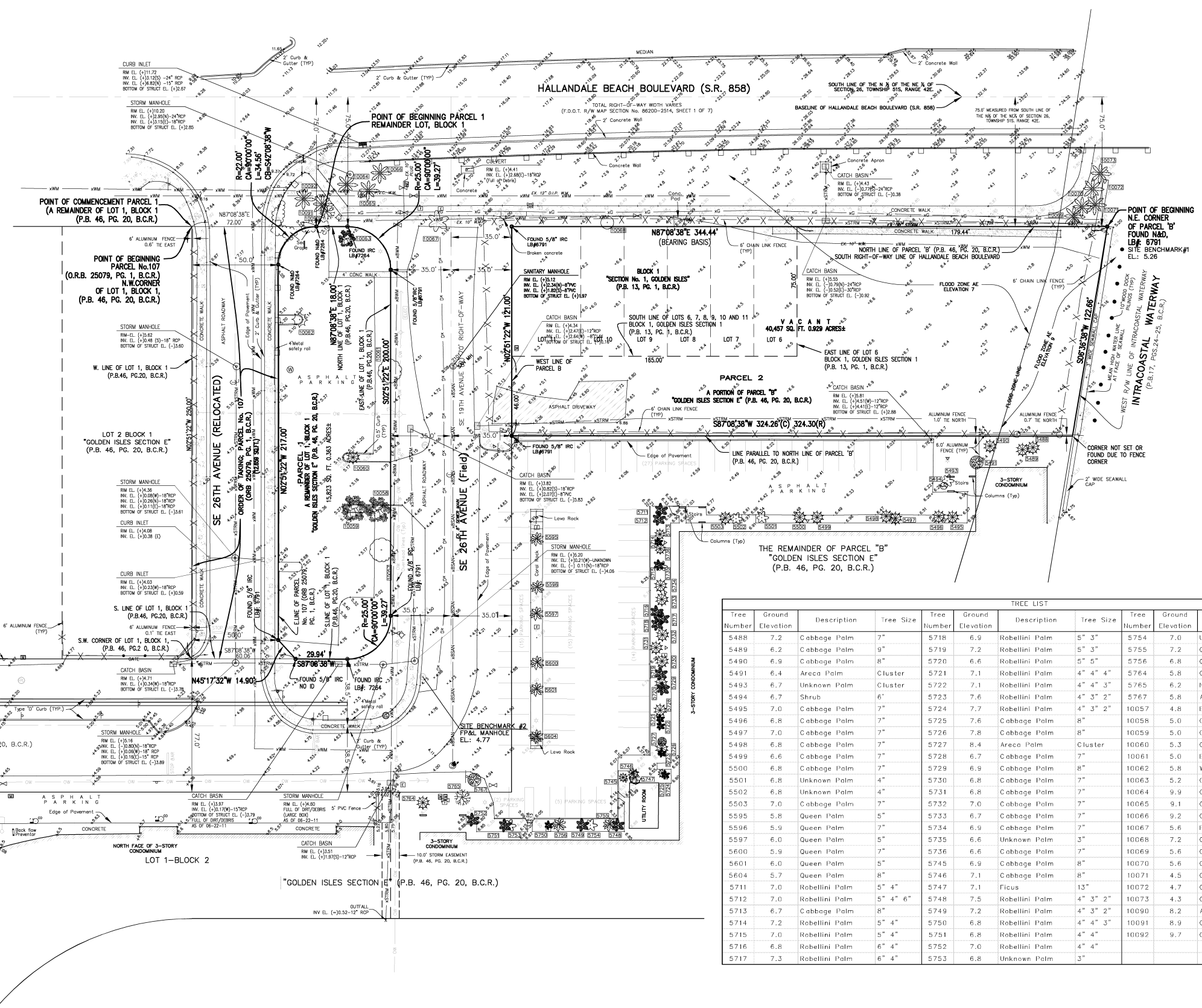

TREE LIST

Tree Number	Ground Elevation	Description	Tree Size	Tree Number	Ground Elevation	Description	Tree Size	Tree Number	Ground Elevation	Description	Tree Size
5488	7.2	Cabbage Palm	7"	5718	6.9	Robellini Palm	5" 3"	5754	7.0	Unknown Palm	3"
5489	6.2	Cabbage Palm	9"	5719	7.2	Robellini Palm	5" 3"	5755	7.2	Queen Palm	4"
5490	6.9	Cabbage Palm	8"	5720	6.6	Robellini Palm	5" 5"	5756	6.8	Queen Palm	4"
5491	6.4	Areca Palm	Cluster	5721	7.1	Robellini Palm	4" 4" 4"	5764	5.8	Cabbage Palm	6"
5493	6.7	Unknown Palm	Cluster	5722	7.1	Robellini Palm	4" 4" 3"	5765	6.2	Norfolk Pine	24"
5494	6.7	Shrub	6'	5723	7.6	Robellini Palm	4" 3" 2"	5767	5.8	Areca Palm	Cluster
5495	7.0	Cabbage Palm	7"	5724	7.7	Robellini Palm	4" 3" 2"	10057	4.8	Black Olive	20"
5496	6.8	Cabbage Palm	7"	5725	7.6	Cabbage Palm	8"	10058	5.0	Orchid	8"5"
5497	7.0	Cabbage Palm	7"	5726	7.8	Cabbage Palm	8"	10059	5.0	Orchid	5"5"
5498	6.8	Cabbage Palm	7"	5727	8.4	Areca Palm	Cluster	10060	5.3	Cabbage Palm	20"
5499	6.6	Cabbage Palm	7"	5728	6.7	Cabbage Palm	7"	10061	5.0	Black Olive	15"
5500	6.8	Cabbage Palm	7"	5729	6.9	Cabbage Palm	8"	10062	5.8	Washingtonia Palm	15"
5501	6.8	Unknown Palm	4"	5730	6.8	Cabbage Palm	7"	10063	5.2	Orchid	5"4"6"4"
5502	6.8	Unknown Palm	4"	5731	6.8	Cabbage Palm	7"	10064	9.9	Coconut Palm	13"
5503	7.0	Cabbage Palm	7"	5732	7.0	Cabbage Palm	7"	10065	9.1	Coconut Palm	15"
5595	5.8	Queen Palm	5"	5733	6.7	Cabbage Palm	7"	10066	9.2	Coconut Palm	15"
5596	5.9	Queen Palm	7"	5734	6.9	Cabbage Palm	7"	10067	5.6	Peuretis Palm	Cluster
5597	6.0	Queen Palm	5"	5735	6.6	Unknown Palm	3"	10068	7.2	Calophyllum Tree	14"
5600	5.9	Queen Palm	7"	5736	6.6	Cabbage Palm	7"	10069	5.6	Coconut Palm	12"
5601	6.0	Queen Palm	5"	5745	6.9	Cabbage Palm	8"	10070	5.6	Coconut Palm	12"
5604	5.7	Queen Palm	8"	5746	7.1	Cabbage Palm	8"	10071	4.5	Coconut Palm	12"
5711	7.0	Robellini Palm	5" 4"	5747	7.1	Ficus	13"	10072	4.7	Coconut Palm	13"
5712	7.0	Robellini Palm	5" 4" 6"	5748	7.5	Robellini Palm	4" 3" 2"	10073	4.3	Coconut Palm	11"
5713	6.7	Cabbage Palm	8"	5749	7.2	Robellini Palm	4" 3" 2"	10090	8.2	Australian Pine	6"
5714	7.2	Robellini Palm	5" 4"	5750	6.8	Robellini Palm	4" 4" 3"	10091	8.9	Coconut Palm	12"
5715	7.0	Robellini Palm	5" 4"	5751	6.8	Robellini Palm	4" 4"	10092	9.7	Coconut Palm	13"
5716	6.8	Robellini Palm	6" 4"	5752	7.0	Robellini Palm	4" 4"				
5717	7.3	Robellini Palm	6" 4"	5753	6.8	Unknown Palm	3"				

NO	DATE	REVISION	BY	NO	DATE	REVISION	BY
5	03-29-11	UPDATED BOUNDARY SURVEY AND ADDED TITLE WORK	LMK	10	09-19-11	UPDATE SURVEY	GYC
4	01-11-07	ADD R/W TO BE VACATED	E.T.V.	9	06-28-11	ADD FLOOD ZONE LINE AND IMPROVEMENTS	GYC
3	09-11-06	REVISE S.R. IDENTIFICATION NUMBER	E.T.V.	8	06-20-11	UPDATE SURVEY	GYC
2	08-31-06	ADD AREA AND FLOOD INFORMATION	E.T.V.	7	04-20-11	REVISE TABLE PER NEW TITLE COMMITMENT	AP
1	08-15-06	ADD WATER MAIN LOCATION AND ELEVATIONS	E.T.V.	6	04-12-11	REVISE PARCEL 1 LEGAL DESCRIPTION	GYC

DESIGNED DATE
DRAWN E.T.V. DATE 07-06-06
CHECKED R.L.F. DATE 07-18-06

Calvin, Giordano & Associates, Inc.
EXCEPTIONAL SOLUTIONS
1800 Eller Drive, Suite 600, Fort Lauderdale, Florida 33316
Phone: 954.921.7781 Fax: 954.921.8807
Certificate of Authorization 6791

PORTION OF GOLDEN ISLES-SECTION E
SECTION 26, TOWNSHIP 51S, RANGE 42E
CITY OF HALLANDALE BEACH

BOUNDARY / TOPOGRAPHIC
TREE SURVEY
BROWARD COUNTY, FLORIDA

APPROVED:
DATE:

SCALE 1" = 30'
PROJECT No 11-4216
CAD FILE 11-L-44
SHEET 2 OF 2

P:\Projects\2011\114216 Related Group - Manero Site Plan\Survey\SKETCH\114216-V-BS-RPC-W-ADJN.dwg

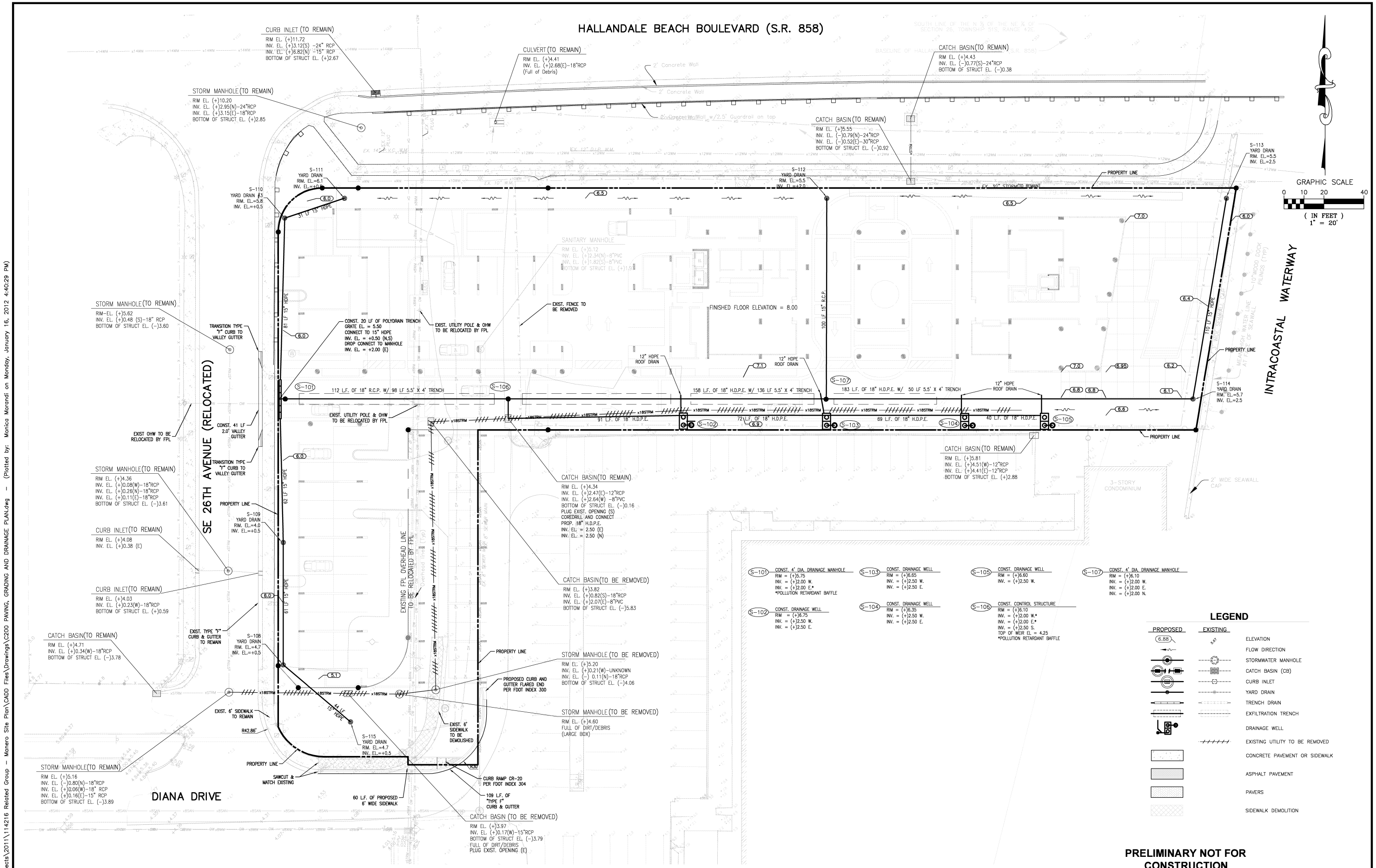

NO	DATE	REVISION	BY	NO	DATE	REVISION	BY

DESIGNED — DATE —
CHECKED — DATE —
ISSUED FOR — DATE —

Calvin, Giordano & Associates, Inc.
EXCEPTIONAL SOLUTIONS
1800 Eller Drive, Suite 600, Fort Lauderdale, Florida 33316
Phone: 954.921.7781 Fax: 954.921.8807
Certificate of Authorization 514

BEACHWALK
HALLANDALE BEACH, FL

AGENCY APPROVAL SET - NOT FOR CONSTRUCTION

PAVING, GRADING AND DRAINAGE PLAN

DOUGLAS R. TAYLOR, P.E.
STATE OF FLORIDA PROFESSIONAL ENGINEER
LICENSE No. 50569

DATE: JANUARY 16, 2012

SCALE 1"=20'
PROJECT No 11-4216
PURPOSE OF THIS SET ----

SHEET: ---
C200
OF --- SHEETS

File Name: P:\Projects\2011\114216 Related Group - Manero Site Plan\CADD Files\Drawings\C200 PAVING, GRADING AND DRAINAGE PLAN.dwg - (Plotted by: Monica Morandi on Monday, January 16, 2012 4:40:29 PM)

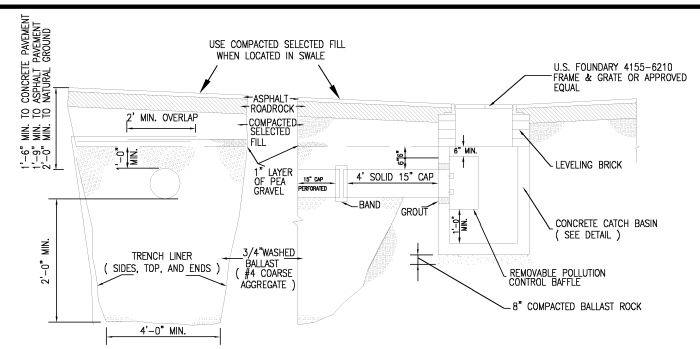

NOTES:

1. 15" PERFORATED C.A.P. DRAIN PIPE SHALL HAVE 360 DEGREE PERFORATIONS WITH NOT LESS THAN 160-3/8" DIAMETER PERFORATIONS PER FOOT OR APPROVED EQUAL.
2. PIPE SHALL TERMINATE 2 FEET FROM END OF TRENCH WITH No 10 GALV. OR ALUMINUM SCREEN WITH OPENINGS NO LARGER THAN 1/2" X 1/2".
3. BALLAST ROCK SHALL BE 3/4" (#4 COARSE AGGREGATE AS PER FDOT STANDARDS) FROM FRESH WATER SOURCE AND SHALL BE WASHED FREE OF DELETERIOUS MATERIAL.
4. SIDES, TOP, AND ENDS OF TRENCH TO BE LINED WITH ONE LAYER OF NONWOVEN GEOTEXTILE (MIRAFI 140 NL, AMCO04545, TNS R035 OR APPROVED EQUAL) WITH 2" MIN. OVERLAP AT TOP TRENCH.
5. SOLID CAP BAFFLE WITH PLATE WELDED ON TOP SHALL BE BOLTED TO WALL OF CATCH BASIN IN 5 LOCATIONS TO ACT AS A POLLUTION BAFFLE. NEOPRENE GASKET MUST BE PLACED BETWEEN BAFFLE EDGES AND CATCH BASIN.
6. BOTTOM OF TRENCH MUST BE BELOW LAYER OF MUCK (IF MUCK IS PRESENT).

EXFILTRATION TRENCH DETAIL

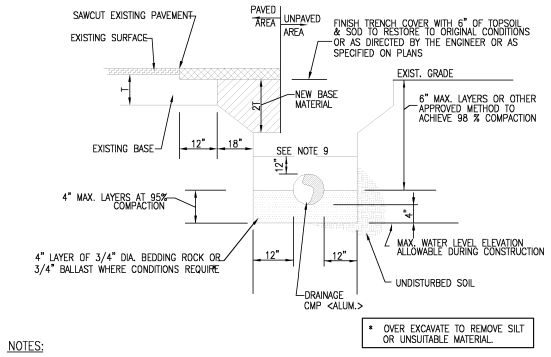

NOTES:

1. WHERE SOIL CONDITIONS CANNOT BE MAINTAINED AS SHOWN ABOVE, PROVIDE APPROVED METHOD OF CONSTRUCTION.
2. SHEETING WILL BE REQUIRED AS DETERMINED IN THE FIELD.
3. REPLACED BASE MATERIAL OVER DITCH SHALL BE TWICE THE THICKNESS OF THE ORIGINAL BASE, MIN. 8", MAX. 18".
4. BASE MATERIAL SHALL BE PLACED IN 6" MAX. (LOOSE MEASUREMENTS) LAYERS AND EACH LAYER THOROUGHLY ROLLED OR TAMPED TO A MINIMUM OF 98% OF MAX. DRY DENSITY, AS DETERMINED BY AASHTO T-180.
5. BASE MATERIAL SHALL HAVE A MINIMUM LBR OF 100 AND A MINIMUM CARBONATE OF 70%.
6. SUBGRADE MATERIAL UNDER PAVED AREAS SHALL BE PLACED IN 6" MAX. <LOOSE MEASUREMENTS> LAYERS AND EACH LAYER THOROUGHLY ROLLED OR TAMPED TO A MINIMUM 100% OF MAX. DENSITY AS DETERMINED BY AASHTO T-99.
7. ASPHALT CONCRETE PAVEMENT JOINTS SHALL BE MECHANICALLY SAWED.
8. SURFACE MATERIAL SHALL BE CONSISTENT WITH THE SURROUNDING SURFACE MATERIAL.
9. MECHANICAL COMPACTION NOT ALLOWED BELOW THIS LEVEL (SEE DETAIL).
10. COMPACTION PERCENTAGES SHOWN REFER TO AASHTO T-180.

TRENCH DETAIL & ROADWAY RESTORATION

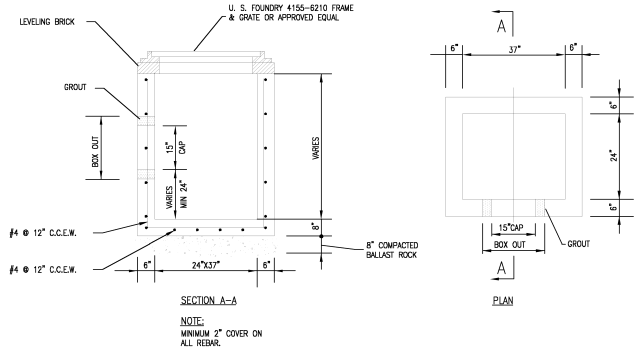

TYPE 'C' CATCH BASIN

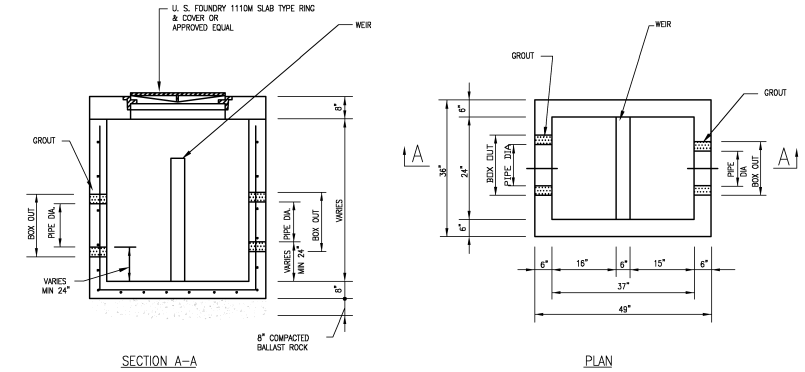

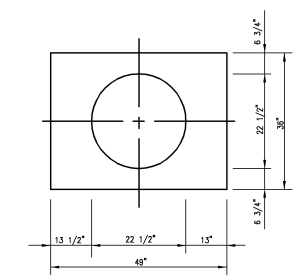

CONTROL STRUCTURE

N.T.S.

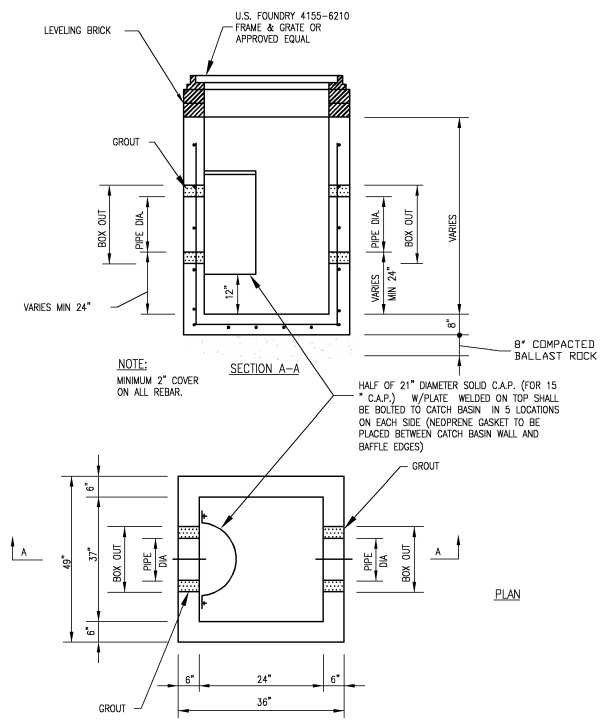

TYPE 'C' CATCH BASIN W/ BAFFLE

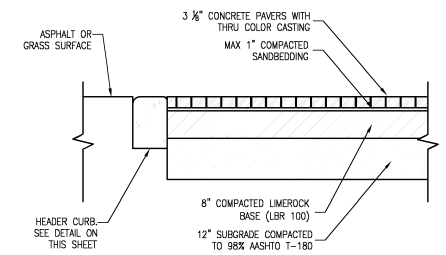

BRICK PAVER ROADWAY CONSTRUCTION

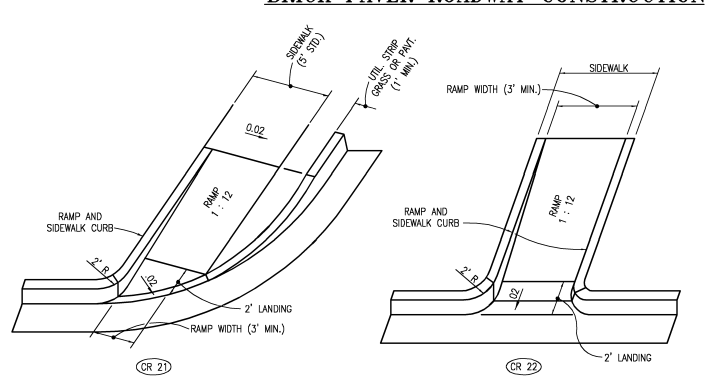

PUBLIC SIDEWALK CURB RAMPS (FDOT INDEX 304)

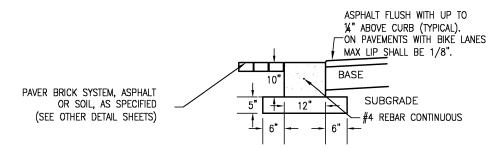

HEADER CURB

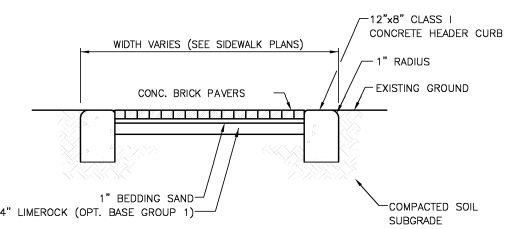

NOTES:

1. BEDDING SAND TO CONFORM TO ASTM C 33 COMMONLY KNOWN AS MANUFACTURED CONCRETE SAND. DO NOT USE MASONRY SAND.
2. THIS SIDEWALK SECTION IS FOR THE NON-VEHICULAR SIDEWALK AREAS ONLY.
3. PROVIDE 1/8" WIDE x ¼" DEEP SAWED CONTRACTION JOINTS IN CONCRETE AT 10' CENTERS (MAX.) NO LATER THAN 12 HOURS AFTER INITIAL SET. COMPARABLE TOOLED JOINTS MAY BE PROVIDED IN LIEU OF SAWED JOINTS.

BRICK PAVER SIDEWALK SECTION

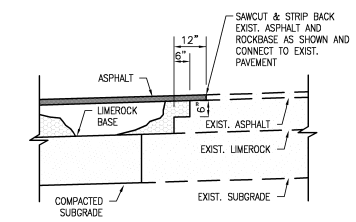

CONNECTION TO EXIST. PAVEMENT DETAIL

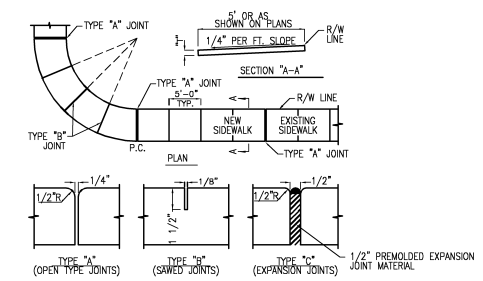

SIDEWALK JOINTS
AT THE DISCRETION OF THE ENGINEER

TABLE OF SIDEWALK JOINTS	
TYPE	LOCATION
"A"	P.C. AND P.T. OF CURVES JUNCTION OF EXIST. AND NEW SIDEWALKS
"B"	5'-0" CENTER TO CENTER ON SIDEWALKS
"C"	WHERE SIDEWALK ABUTS CONC. CURBS, DRIVEWAYS AND SIMILAR STRUCTURES.

TABLE OF SIDEWALK THICKNESS - "T"	
LOCATION	"T"
RESIDENTIAL AREAS	4"
@ DRIVEWAYS & OTHER AREAS	6"
LAST SECTION ADJACENT TO STREET PAVEMENT	6"

NOTE:
WHEN CONSTRUCTING A SIDEWALK APPROACHING A DRIVEWAY OR ROAD FOLLOW FDOT SPECIFICATIONS AND CREATE RAMP PER ADA REQUIREMENT.

SIDEWALKS

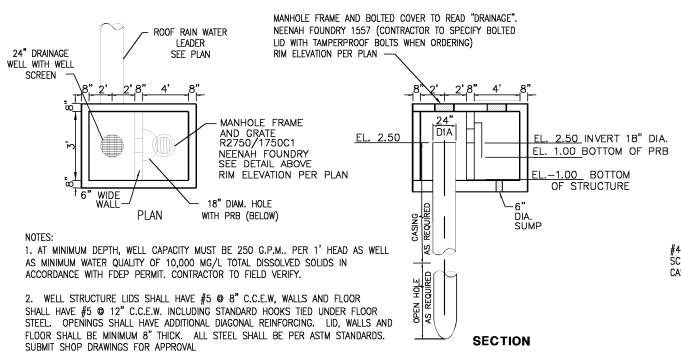

NOTES:

1. AT MINIMUM DEPTH, WELL CAPACITY MUST BE 250 G.P.M., PER 1' HEAD AS WELL AS MINIMUM WATER QUALITY OF 10,000 MG/L TOTAL DISSOLVED SOLIDS IN ACCORDANCE WITH FDEP PERMIT. CONTRACTOR TO FIELD VERIFY.

2. WELL STRUCTURE LIDS SHALL HAVE #5 @ 8" C.C.E.W. WALLS AND FLOOR SHALL HAVE #5 @ 12" C.C.E.W. INCLUDING STANDARD HOOKS TIED UNDER FLOOR STEEL. OPENINGS SHALL HAVE ADDITIONAL DIAGONAL REINFORCING. LID, WALLS AND FLOOR SHALL BE MINIMUM 8" THICK. ALL STEEL SHALL BE PER ASTM STANDARDS. SUBMIT SHOP DRAWINGS FOR APPROVAL

INJECTION (GRAVITY) WELL DETAIL

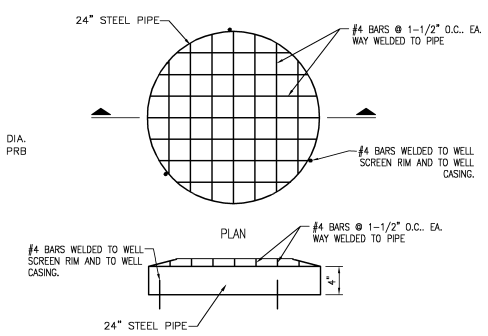

NOTE: WELL SCREEN TO BE PAINTED BOTH SIDES WITH TWO COATS OF COAL TAR EXOXY KOPPERS 300 M OR EQUAL.

INJECTION WELL SCREEN DETAIL

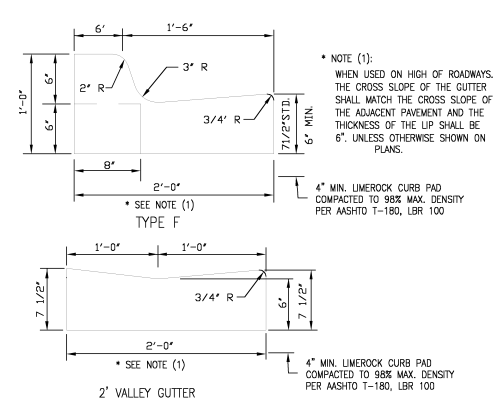

CURB DETAILS

PRELIMINARY NOT FOR CONSTRUCTION

NO	DATE	REVISION	BY	NO	DATE	REVISION	BY

DESIGNED —
DATE —
CHECKED —
DATE —
ISSUED FOR —
DATE —

Calvin, Giordano & Associates, Inc.
EXCEPTIONAL SOLUTIONS
1800 Eller Drive, Suite 600, Fort Lauderdale, Florida 33316
Phone: 954.921.7781 Fax: 954.921.8807
Certificate of Authorization 514

BEACHWALK
2600 EAST HALLANDALE BEACH BOULEVARD
HALLANDALE BEACH, FL

AGENCY APPROVAL SET - NOT FOR CONSTRUCTION

PAVING, GRADING AND DRAINAGE DETAILS

DOUGLAS R. TAYLOR, P.E.
STATE OF FLORIDA PROFESSIONAL ENGINEER
LICENSE No. 50569

DATE: JANUARY 16, 2012

SCALE ----
PROJECT No 11-4216
PURPOSE OF THIS SET ----

SHEET: ---
C201
OF --- SHEETS

File Name: P:\Projects\2011\114216 Reisted Group - Monero Site Plan\CADD Files\Drawings\C201 PAVING, GRADING AND DRAINAGE DETAILS.dwg - (Plotted by: Monica Morandi on Monday, January 16, 2012 9:49:57 AM)

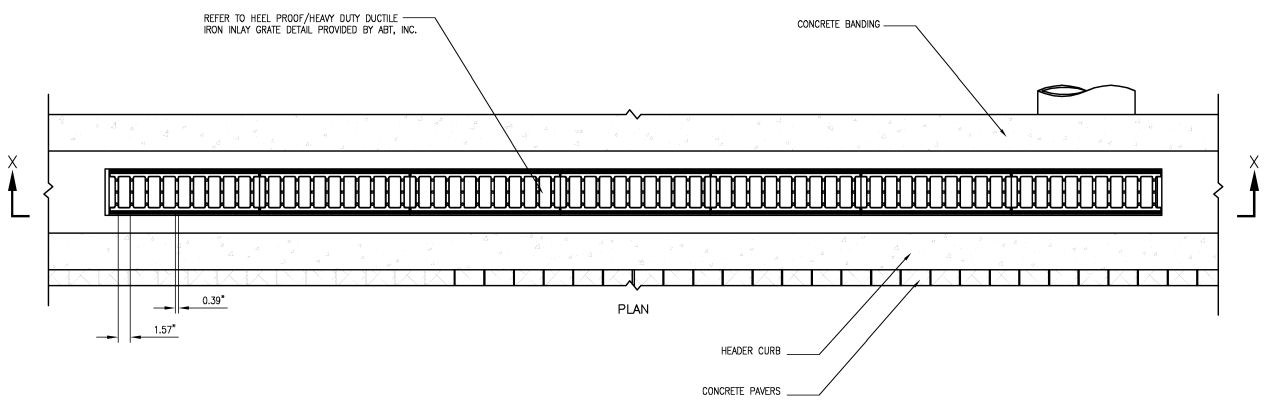

NOTES:

1. MATERIAL: ASTM A536 GRADE 65-45-12 DUCTILE IRON CASTING. MATERIAL CERTIFICATION REQIRED.
2. TOLERANCES: 0.50[0.020"] + (0.05[.002"] X FEATURE LENGTH) + (0.50[0.020"] X PARTING LINES) UNLESS NOTED OTHERWISE ON DRAWING. SEE ANSI TOLERANCING SYMBOLS.
3. SHOT PEENED / BLASTED FINISH. NO BLACK "E"-COAT UNLESS SPECIFIED ON PURCHASE ORDER.
4. EXTERIOR CORNER RADII 0.50[0.020"] TO 1.50[0.060"] UNLESS SPECIFIED OTHERWISE ON DRAWING.
5. INTERIOR FILLET RADII 0.00 TO 3.00[1/8"] UNLESS SPECIFIED OTHERWISE ON DRAWING.
6. TYPICAL DRAFT ANGLE IS 2° TO 5° UNLESS SPECIFIED OTHERWISE ON DRAWING.
7. ALL FEATURES STRAIGHT, SQUARE, SYMMETRICAL, AND/OR TYPICAL UNLESS NOTED OTHERWISE.

LINE DRAIN NOTES

1. LINE DRAIN IS SUITABLE FOR APPLICATIONS CONTROLLING SPREAD IN GUTTER FLOW CONDITIONS OR TO INTERCEPT SHEET FLOW. TYPICAL APPLICATION IS AT THE STREET CURB OR BARRIER.
2. THE FRAME AND GRATE IS SUITABLE FOR PEDESTRIAN, BICYCLE AND HEAVY DUTY TRAFFIC AND RATED FOR H-20 LOADS.
3. CONCRETE THICKNESS, TYPE, AND AMOUNT OF REINFORCEMENT TO BE SAME AS ADJACENT PAVEMENT OR GREATER. PERFORM STRUCTURAL ANALYSIS TO DETERMINE REQUIREMENTS FOR APPLICATION.
4. TOP OF GRATE TO BE INSTALLED FLUSH TO 3MM BELOW FINISHED GRADE. BEVEL CONCRETE TO TOP OF GRATE IF BELOW FLUSH.

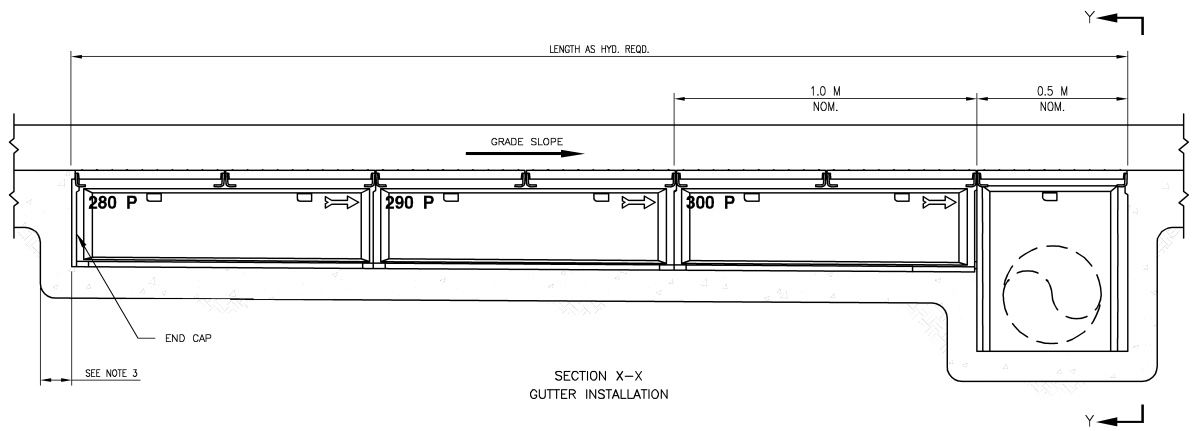

SECTION X–X
GUTTER INSTALLATION

CROSS SECTION

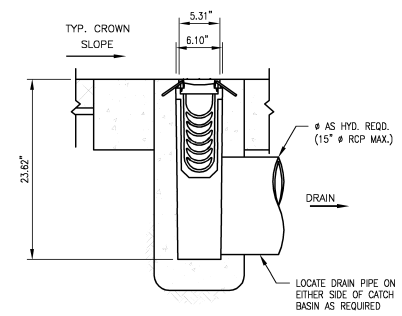

SECTION Y–Y

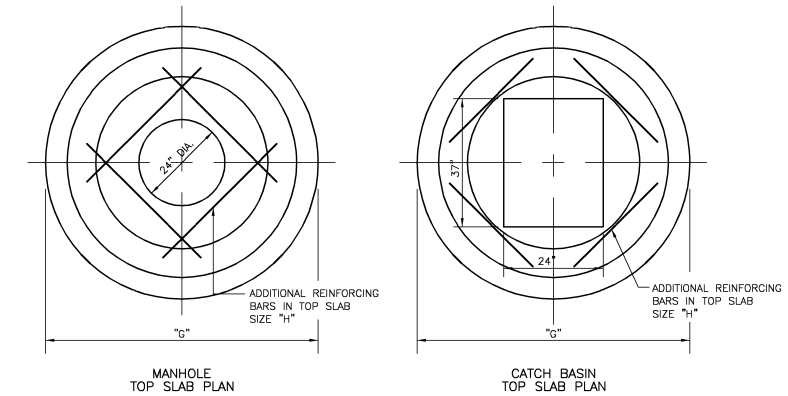

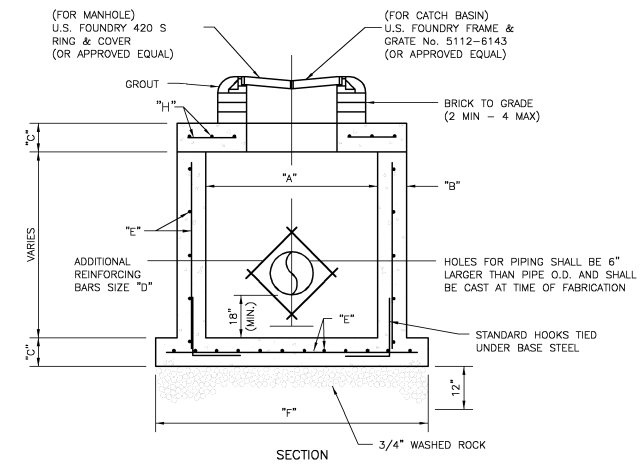

SECTION

	"A"	"B"	"C"	"D"	"E"	"F"	"G"	"H"
C–4/M–4	4'–0" ø	8"	8"	#4 @ 12" C.C.E.W.	#4 @ 12" C.C.E.W.	6'–4" ø	5'–4" ø	#4 @ 6" C.C.E.W.
C–5/M–5	5'–0" ø	8"	8"	#5 @ 12" C.C.E.W.	#5 @ 12" C.C.E.W.	7'–4" ø	6'–4" ø	#5 @ 8" C.C.E.W.
C–6/M–6	6'–0" ø	8"	8"	#5 @ 6" C.C.E.W.	#5 @ 6" C.C.E.W.	8'–4" ø	7'–4" ø	#5 @ 6" C.C.E.W.

PRECAST CATCH BASIN AND MANHOLE

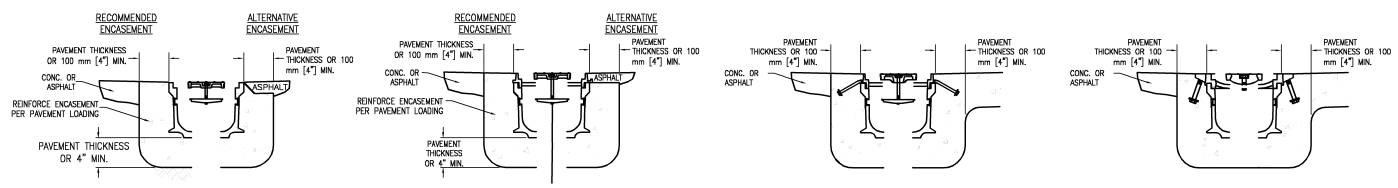

POLYDRAIN
TYPICAL INSTALLATION
INLAY NO. 502 GRATE ADJACENT TO ASPHALT ROADSIDE DRAINAGE – PARKING AREAS MEDIUM DUTY – SLOW SPEED

POLYDRAIN
TYPICAL INSTALLATION
NO. 512 FRAME & GRATE ADJACENT TO ASPHALT ROADSIDE DRAINAGE – PARKING AREAS HEAVY DUTY – SLOW SPEED

POLYDRAIN
TYPICAL INSTALLATION
NO. 513AF FRAME & GRATE ADJACENT TO ASPHALT OR CONCRETE ROADWAY DRAINAGE – HARD TIRE TRAFFIC HEAVY DUTY – HIGH SPEED

POLYDRAIN
TYPICAL INSTALLATION
NO. 532 FRAME & GRATE ADJACENT TO ASPHALT OR CONCRETE ROADWAY DRAINAGE – HARD TIRE TRAFFIC EXTRA HEAVY DUTY – HIGH SPEED

NOTES:

1. DRAWING UNITS = mm
2. VERTICAL SCALE = 4 X HORIZONTAL SCALE
3. ADD POLYWALLS TO TOP OF CHANNELS AS NEEDED.

NOTES:

1. CHOOSE SECTION(S) APPROPRIATE FOR THE APPLICATION BEING DETAILED.
2. MIRROR SECTION HALF(S) AND COPY HATCH PATTERNS AS REQUIRED.
3. COMBINE SECTION HALFS AT INVERT TO FORM TRENCH SECTION DETAIL.
4. NOTES ON SECTION HALFS COMMON TO ALL SECTIONS.
5. INSTALL SPECIFIED GRATE AND GRATE RETAINER IN SECTION.
6. SECTIONS DRAWN TO SCALE IN mm.

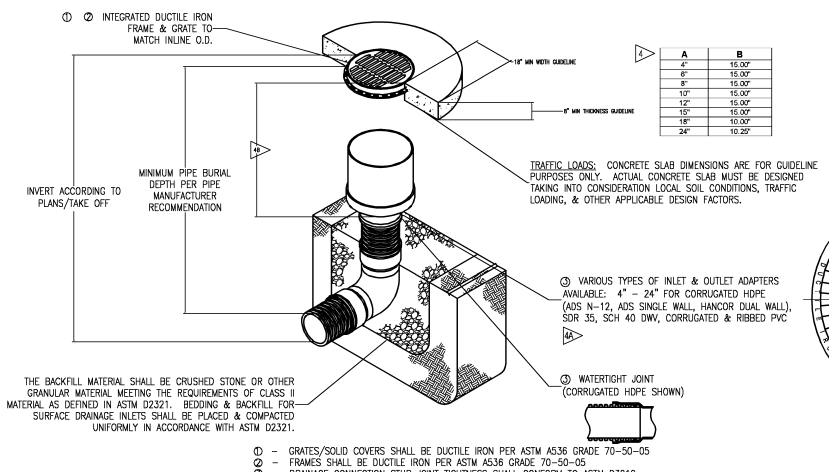

A	B
4"	15.00"
6"	15.00"
8"	15.00"
10"	15.00"
12"	15.00"
15"	15.00"
18"	10.00"
24"	10.25"

TRAFFIC LOADS: CONCRETE SLAB DIMENSIONS ARE FOR GUIDELINE PURPOSES ONLY. ACTUAL CONCRETE SLAB MUST BE DESIGNED TAKING INTO CONSIDERATION LOCAL SOIL CONDITIONS, TRAFFIC LOADING, & OTHER APPLICABLE DESIGN FACTORS.

① – GRATES/SOLID COVERS SHALL BE DUCTILE IRON PER ASTM A536 GRADE 70-50-05
② – FRAMES SHALL BE DUCTILE IRON PER ASTM A536 GRADE 70-50-05
③ – DRAINAGE CONNECTION STUB JOINT TIGHTNESS SHALL CONFORM TO ASTM D3212 FOR CORRUGATED HDPE (ADS & HANCOR DUAL WALL) & SDR 35 PVC

TYPICAL YARD DRAIN

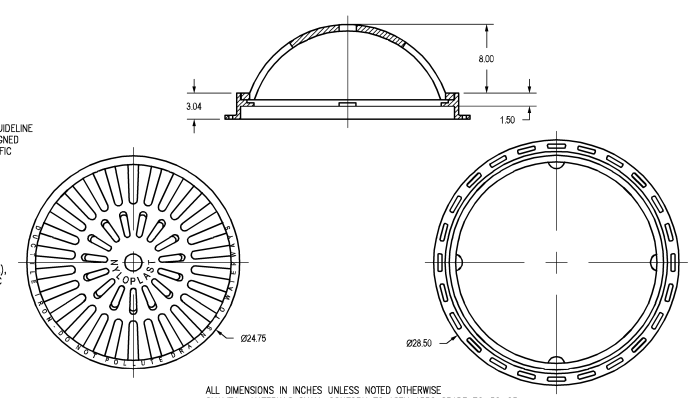

ALL DIMENSIONS IN INCHES UNLESS NOTED OTHERWISE
QUALITY: MATERIALS SHALL CONFORM TO ASTM A536 GRADE 70-50-05
PAINT: CASTINGS ARE FURNISHED WITH A BLACK PAINT
LOCKING DEVICE AVAILABLE UPON REQUEST SEE DRAWING NO. 7001-110-231

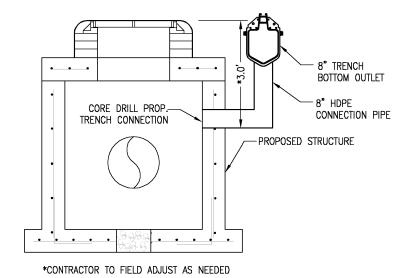

*CONTRACTOR TO FIELD ADJUST AS NEEDED

TRENCH DRAIN DROP CONNECTION TO STRUCTURE

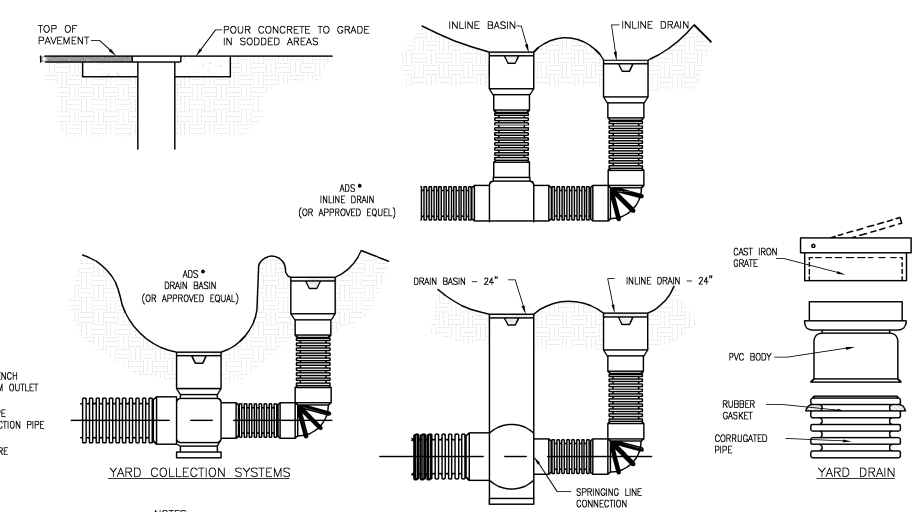

NOTES :

1. YARD DRAINS SHALL ONLY BE USED IN PRIVATE PROPERTY LOCATIONS; PUBLIC RIGHT-OF-WAY LOCATIONS WILL NOT BE PERMITTED.
2. CONCRETE COLLAR IS NOT REQUIRED IN PAVED AREAS IF PAVEMENT SURFACE IS FINISHED PRIOR TO CONDITIONAL FINAL INSPECTION.
3. SEE "TYPICAL TRENCH DETAIL" FOR BACKFILLING REQUIREMENTS.

TYPICAL YARD DRAIN/CPEP INSTALLATION DETAIL

PRELIMINARY NOT FOR CONSTRUCTION

NO	DATE	REVISION	BY	NO	DATE	REVISION	BY

DESIGNED ---
DATE ---
CHECKED ---
DATE ---
ISSUED FOR ---
DATE ---

Calvin, Giordano & Associates, Inc.
EXCEPTIONAL SOLUTIONS
1800 Eller Drive, Suite 600, Fort Lauderdale, Florida 33316
Phone: 954.921.7781 Fax: 954.921.8807
Certificate of Authorization 514

BEACHWALK
2600 EAST HALLANDALE BEACH BOULEVARD
HALLANDALE BEACH, FL
AGENCY APPROVAL SET - NOT FOR CONSTRUCTION

PAVING, GRADING AND DRAINAGE DETAILS

DOUGLAS R. TAYLOR, P.E.
STATE OF FLORIDA PROFESSIONAL ENGINEER
LICENSE No. 50569
DATE: JANUARY 16, 2012

SCALE 1"=20'
PROJECT No 11-4216
PURPOSE OF THIS SET ---

SHEET: ---
C202
OF --- SHEETS

File Name: P:\Projects\2011\114216 Related Group - Mariero Site Plan\CADD Files\Drawings\C201 PAVING, GRADING AND DRAINAGE DETAILS.dwg - (Plotted by: Monica Morandi on Monday, January 16, 2012 9:50:24 AM)

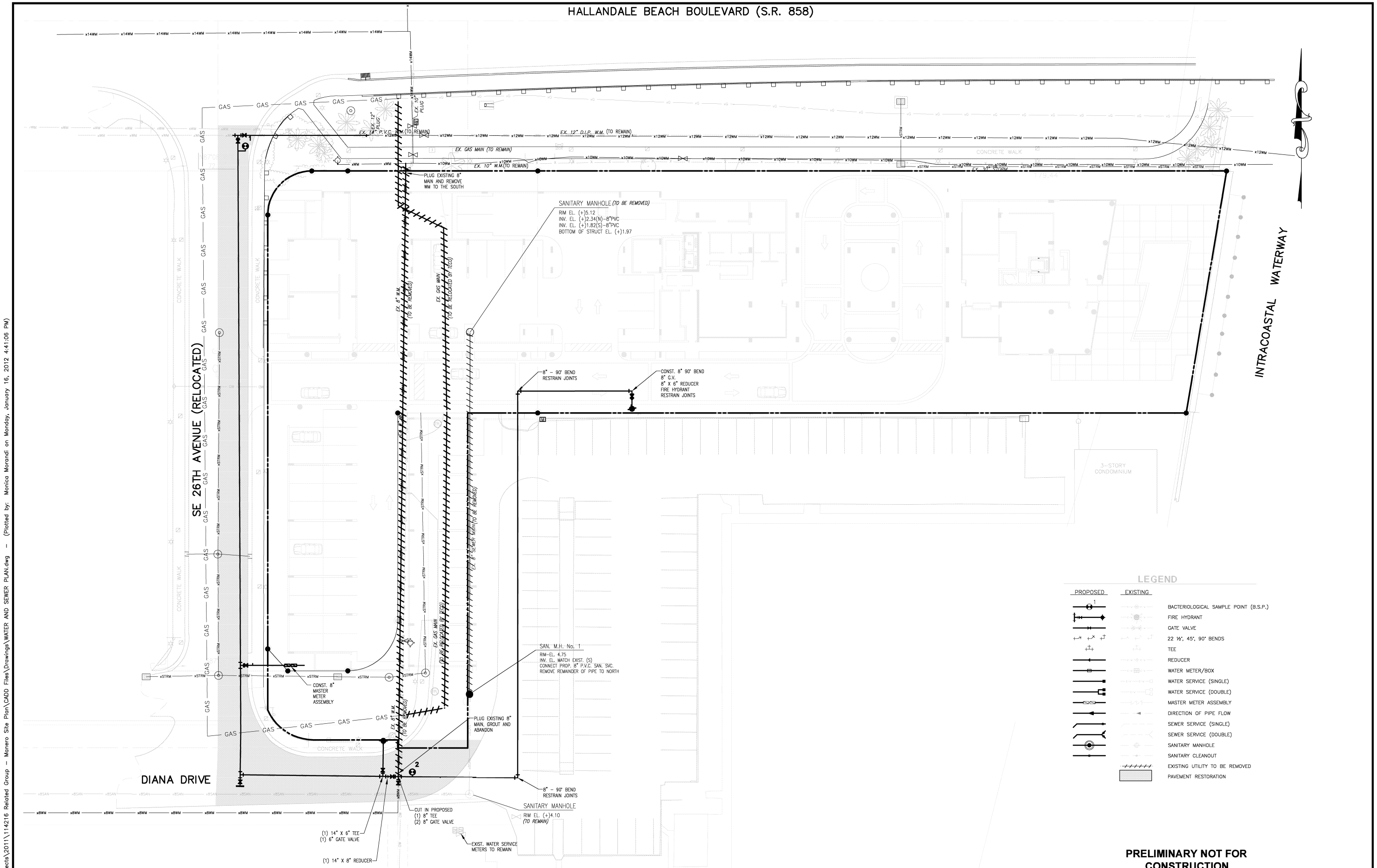

PRELIMINARY NOT FOR CONSTRUCTION

File Name: P:\Projects\2011\114216 Related Group - Manero Site Plan\CADD Files\Drawings\WATER AND SEWER PLAN.dwg - (Plotted by: Monica Morandi on Monday, January 16, 2012 4:41:06 PM)

NO	DATE	REVISION	BY	NO	DATE	REVISION	BY

DESIGNED ---
DATE ---
CHECKED ---
DATE ---
ISSUED FOR ---
DATE ---

Calvin, Giordano & Associates, Inc.
EXCEPTIONAL SOLUTIONS
1800 Eller Drive, Suite 600, Fort Lauderdale, Florida 33316
Phone: 954.921.7781 Fax: 954.921.8807
Certificate of Authorization 514

BEACHWALK
2600 EAST HALLANDALE BEACH BOULEVARD
HALLANDALE BEACH, FL

AGENCY APPROVAL SET - NOT FOR CONSTRUCTION

WATER AND SEWER PLAN

DOUGLAS R. TAYLOR, P.E.
STATE OF FLORIDA PROFESSIONAL ENGINEER
LICENSE No. 50569

DATE: JANUARY 16, 2012

SCALE 1"=20'
PROJECT No 11-4216
PURPOSE OF THIS SET ---

SHEET: ---
C300
OF --- SHEETS

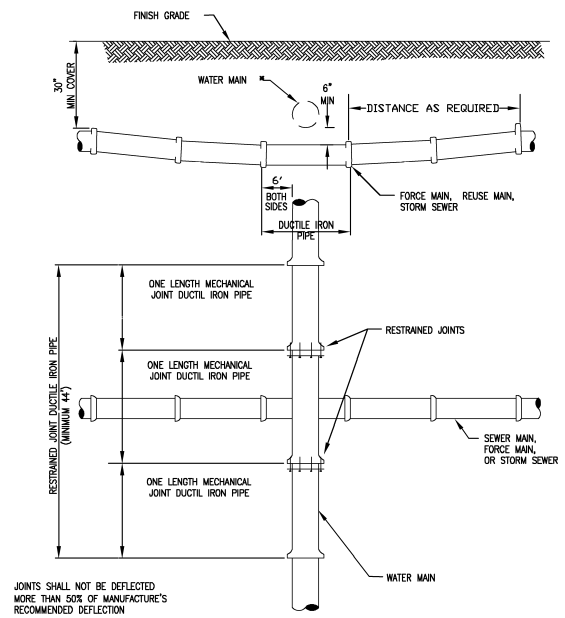

STANDARD UTILITY CROSSING

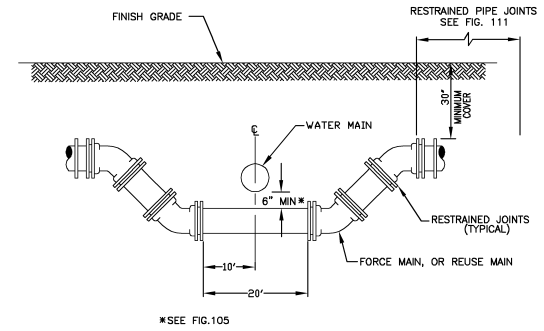

WHEREVER POSSIBLE DEFLECTION OF THE PIPE WILL BE USED TO AVOID EXISTING OBSTRUCTIONS.THIS CROSSING SHALL BE USED ONLY WHEN APPROVED BY HALLANDALE BEACH.

SPECIAL UTILITIES CROSSING

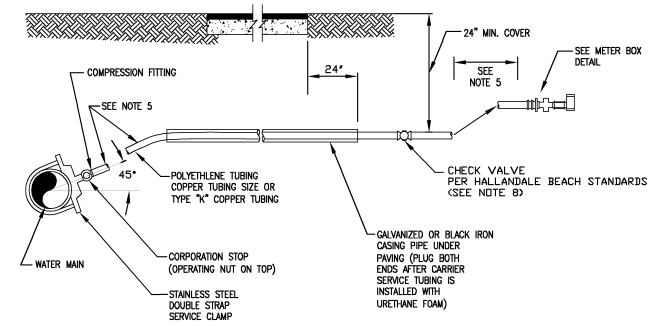

NOTES:
1. SUCCESSIVE TAPS INTO THE WATER MAIN SHALL BE SPACED NOT LESS THAN 18" ON CENTER. NO TAPS SHALL BE CLOSER THAN 18" TO A JOINT.
2. 1" SERVICE REQUIRE A 2" MINIMUM INSIDE DIAMETER CASING PIPE.
3. 2" SERVICE REQUIRE A 3" MINIMUM INSIDE DIAMETER CASING PIPE.
4. ALL CASING PIPE SHALL EXTEND A MINIMUM OF 2' BEYOND THE EDGE OF PAVING STREETS.
5. FOR 1" SERVICE LINES THE MINIMUM RADIUS SHALL BE 14". FOR 2" SERVICE LINES THE MINIMUM RADIUS SHALL BE 21".
6. ALL CASING PIPE ENDS SHALL BE FILED SMOOTH WITH NO BURRS AND SEALED WITH URETHANE FOAM.
7. THE POLYETHLENE OR COPPER TUBING SHALL BE ONE CONTINUOUS PIECE FROM THE CORPORATION STOP TO THE CHECK VALVE. NO JOINTS WILL BE PERMITTED BETWEEN THESE POINTS.
8. THE CHECK VALVE IS TO BE INSTALLED 5 FEET BEFORE THE METER VALVE. SEE MATERIALS REVIEW LIST.

THIS DETAIL APPLIES ONLY TO RESIDENTIAL ROADS WITH LESS THAN 70' R.O.W. (NO MEDIAN) OR WITHIN EASEMENTS

TYPE 1 WATER SERVICE CONNECTION

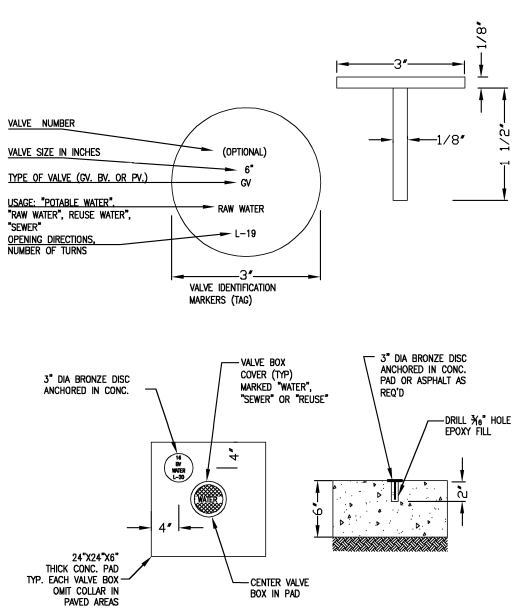

NOTE:
VALVE BOX, COVER AND EXTENSION PER APPROVED MATERIALS LIST

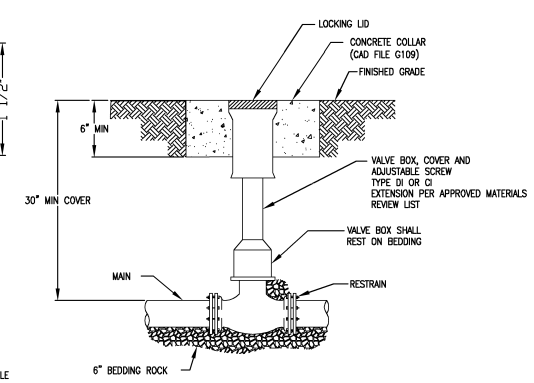

NOTES:
1. WHEN VALVE IS NOT LOCATED IN PAVEMENT, PLACE A WHITE PAVEMENT REFLECTOR MARKER IN THE DRIVE LANE, ADJACENT TO THE VALVE.
2. OPERATOR EXTENSION SHAFT SHALL BE PROVIDED WHEN OPERATING NUT IS MORE THAN 24" BELOW TOP OF VALVE BOX.
3. PVC OR DUCTILE IRON PIPE IS NOT ACCEPTABLE FOR VALVE BOX RISER.

TYPICAL GATE VALVE SETTINGS

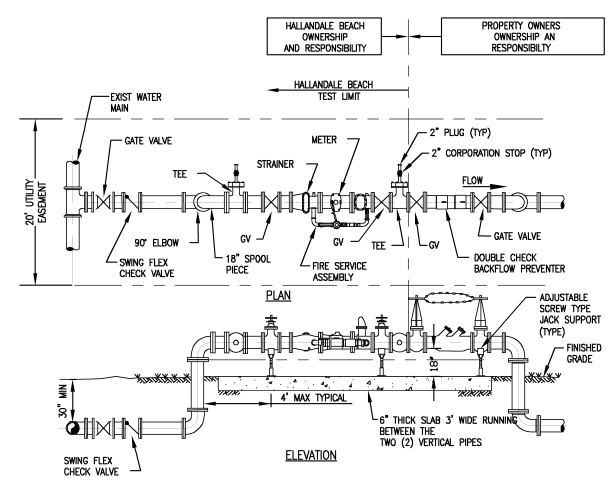

NOTES:
1. THE DOUBLE CHECK VALVE SHALL BE PRIVATELY OWNED BY THE PROPERTY OWNER.
2. HALLANDALE BEACH RESPONSIBILITY IS BETWEEN WATER MAIN AND METER.
3. EASEMENT SHALL BE PROVIDED IN ACCORDANCE WITH HALLANDALE BEACH MINIMUM REQUIREMENTS.
4. FIRELINE FIRE SERVICE ASSEMBLIES TO BE PER MATERIALS REVIEW LIST.
5. ALL ABOVE GROUND PIPE SHALL BE FLANGED, DI (DUCTILE IRON) TYPE.
6. ALL PIPE LEADING FROM WATER MAIN TO FLANGED PIPING SHALL BE D.I. PIPE, RESTRAINED JOINTS.
7. ALL ABOVE GROUND PIPING, FITTINGS, GATE VALVES AND CHECK VALVES AND THE METER ASSEMBLY SHALL BE PAINTED WITH POLYURETHANE COATING (COLOR BEIGE).

COMBINED DOMESTIC WATER SERVICE AND FIRE PROTECTION

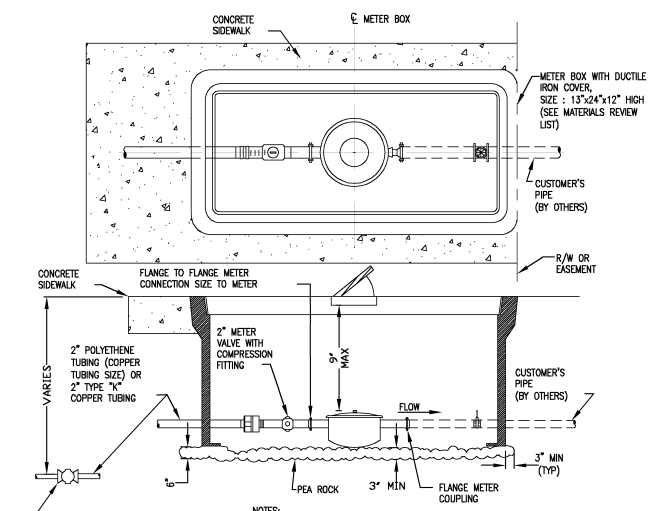

METER SIZE	LAYING LENGTH (IN)	HEIGHT (IN)
1 ½"	13	6 ¾"
2"	17	7 13/16"

NOTES:
1. ALL STRUCTURES IN R/W TO BE TRAFFIC BEARING TYPE.
2. R/W LINE OR EASEMENT LINE IS THE CUSTOMERS SIDE OF METER BOX.
3. CITY OF HALLANDALE BEACH RESPONSIBILITY ENDS AT THE CUSTOMERS SIDE OF METER.
4. CURVE IN SERVICE LINE SHALL BE AS CLOSE TO METER BOX AS PRACTICAL, WITH A MINIMUM RADIUS SHALL BE 21" FOR 2" TUBING.
5. ALL METERS WILL BE SUPPLIED AND INSTALLED BY HALLANDALE BEACH DPW. METER HAS IRON PIPE THREAD MALE CONNECTION ON EACH END.
6. WHEN SIDEWALKS ARE PRESENT, OR PLANNED FOR IN THE R/W, THE BACK EDGE OF THE METER BOX SHALL LINE UP WITH THE BACK EDGE OF THE SIDEWALK.
7. METER SHALL BE CENTERED IN BOX DIRECTLY UNDER THE ACCESS LID.
8. THE CHECK VALVE IS TO BE INSTALLED 5 FEET BEFORE THE METER VALVE.
9. WHEN THERE ARE NO SIDEWALKS, CONSTRUCT 6" WIDE x 6" THICK CONCRETE COLLAR @ GRADE.

METER INSTALLATION FOR 1-1/2" AND 2" METERS

CALL 48 HOURS BEFORE YOU DIG IN FLORIDA
IT'S THE LAW!
1-800-432-4770
SUNSHINE STATE ONE CALL OF FLORIDA, INC.

PRELIMINARY NOT FOR CONSTRUCTION

NO	DATE	REVISION	BY	NO	DATE	REVISION	BY

DESIGNED — DATE —
CHECKED — DATE —
ISSUED FOR — DATE —

Calvin, Giordano & Associates, Inc.
EXCEPTIONAL SOLUTIONS
1800 Eller Drive, Suite 600, Fort Lauderdale, Florida 33316
Phone: 954.921.7781 Fax: 954.921.8807
Certificate of Authorization 514

BEACHWALK
2600 EAST HALLANDALE BEACH BOULEVARD
HALLANDALE BEACH, FL
AGENCY APPROVAL SET - NOT FOR CONSTRUCTION

WATER DISTRIBUTION DETAILS

DOUGLAS R. TAYLOR, P.E.
STATE OF FLORIDA PROFESSIONAL ENGINEER
LICENSE No. 50569

DATE: JANUARY 16, 2012

SCALE ----
PROJECT No 11-4216
PURPOSE OF THIS SET ----

SHEET: —
C301
OF — SHEETS

File Name: P:\Projects\2011\114216 Related Group - Manero Site Plan\CADD Files\Drawings\C301 WATER DETAILS.dwg - (Plotted by: Monica Morandi on Monday, January 16, 2012 9:51:23 AM)

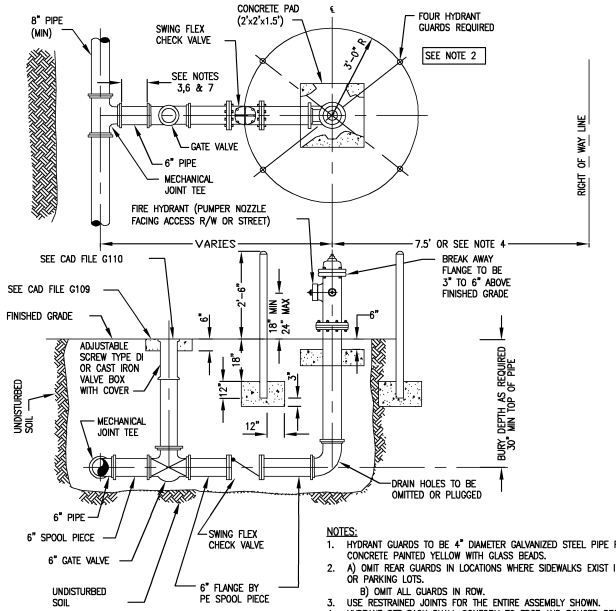

NOTES:
1. HYDRANT GUARDS TO BE 4" DIAMETER GALVANIZED STEEL PIPE FILLED WITH CONCRETE PAINTED YELLOW WITH GLASS BEADS.
2. A) OMIT REAR GUARDS IN LOCATIONS WHERE SIDEWALKS EXIST IN EASEMENTS OR PARKING LOTS.
   B) OMIT ALL GUARDS IN ROW.
3. USE RESTRAINED JOINTS FOR THE ENTIRE ASSEMBLY SHOWN.
4. HYDRANT SET BACK SHALL CONFORM TO FDOT AND BCHCED REQUIREMENTS, WHERE APPLICABLE.
5. DUCTILE IRON TO BE USED FOR FIRE HYDRANT ASSEMBLY.
6. GATE VALVE IS NORMALLY LOCATED NEXT TO TEE.
7. IF DISTANCE FROM MAIN LINE TO FIRE HYDRANT IS GREATER THAN 16 FEET ANOTHER GATE VALVE WILL BE PROVIDED CLOSE TO THE HYDRANT. THIS SECOND VALVE SHALL BE INSTALLED WITHIN 5' OF THE FIRE HYDRANT. CHECK VALVE SHALL BE WITHIN 3' OF FIRE HYDRANT.

FIRE HYDRANT INSTALLATION

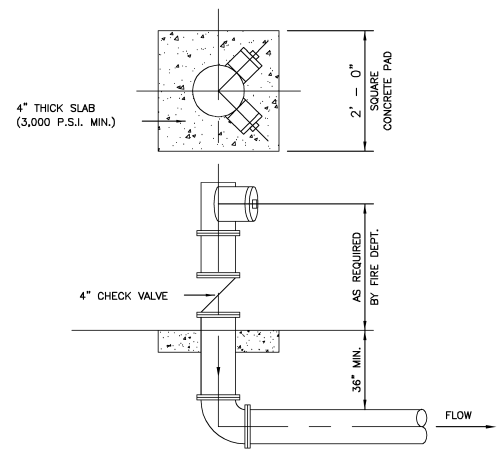

NOTE:
ALL JOINTS TO BE RESTRAINED.

SIAMESE CONNECTION

(GEM MODEL No. F-715, OR APPROVED EQUAL)

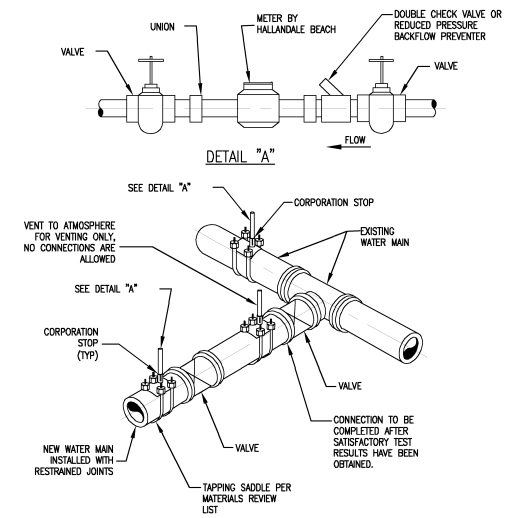

NOTES:
1. REMOVE TEMPORARY CONNECTION AT CORPORATION STOP ON EXISTING MAIN AFTER FILLING AND FLUSHING OF NEW LINE.
2. DO NOT REMOVE TEMPORARY CONNECTION AT CORPORATION STOP ON NEW MAIN UNTIL ALL TESTING HAS BEEN COMPLETED.
3. CLOSE CORPORATION STOPS AND PLUG WITH BRASS FITTINGS/CAP AFTER SAMPLING IS COMPLETED.

FILLING AND FLUSHING CONNECTION

TESTING:

1. BEFORE ANY PHYSICAL CONNECTIONS TO THE EXISTING WATER MAINS ARE MADE, THE COMPLETE WATER SYSTEM SHALL BE PRESSURE TESTED AND DISINFECTED.
2. WATER USED BY THE CONTRACTOR SHALL BE METERED AND PAID FOR BY THE CONTRACTOR, DEPENDING ON THE STANDARD. CONTRACTOR SHALL ALSO VERIFY TIMES OF FILLING MAINS WITH UTILITY DEPARTMENT. THE PRESSURE TEST SHALL BE WITNESSED BY A REPRESENTATIVE OF THE CITY OF HALLANDALE BEACH AND THE ENGINEER OR ENGINEER'S REPRESENTATIVE.
3. HYDROSTATIC TESTING OF NEW MAINS SHALL BE PERFORMED AT A MINIMUM STARTING PRESSURE OF 150 PSI FOR TWO HOURS IN ACCORDANCE WITH ANSI/AWWA C600-93, OR LATEST REVISION. THE PRESSURE TEST SHALL NOT VARY MORE THAN +5 PSI DURING THE TEST.
4. THE ALLOWABLE LEAKAGE SHALL BE LESS THAN THE NUMBER OF GALLONS PER HOUR AS DETERMINED BY THE FORMULA:

$$Q \text{ (GALLONS PER HOUR)} = \frac{L\ D\ (P)^{0.5}}{148{,}000}$$

Q = QUANTITY OF MAKEUP WATER (TESTING ALLOWANCE), IN GALS/HR (NO ALLOWABLE LEAKAGE FOR VALVES)
L = LENGTH OF PIPE TESTED IN FEET
D = NOMINAL DIAMETER OF PIPE, IN INCHES
P = AVERAGE TEST PRESSURE DURING THE HYDROSTATIC TEST IN LBS/SQ.IN. (GAUGE)

5. WATER MAINS SHALL BE CLEANED AND DISINFECTED IN ACCORDANCE WITH ANSI/AWWA C651-92, OR LATEST REVISION.
6. SAMPLING POINTS SHALL BE PROVIDED AT THE LOCATIONS SHOWN ON THE PLANS. IF NOT SPECIFIED, SAMPLING POINTS SHALL BE PROVIDED AT INTERVALS OF 1500 MAXIMUM FOR LINES GREATER THAN 1500 IN LENGTH. PROVIDE A MINIMUM OF TWO SAMPLING POINTS FOR ALL OTHER TEST SEGMENTS.

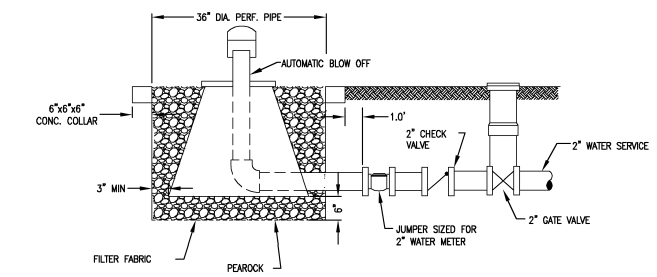

AUTOMATIC BLOW OFF

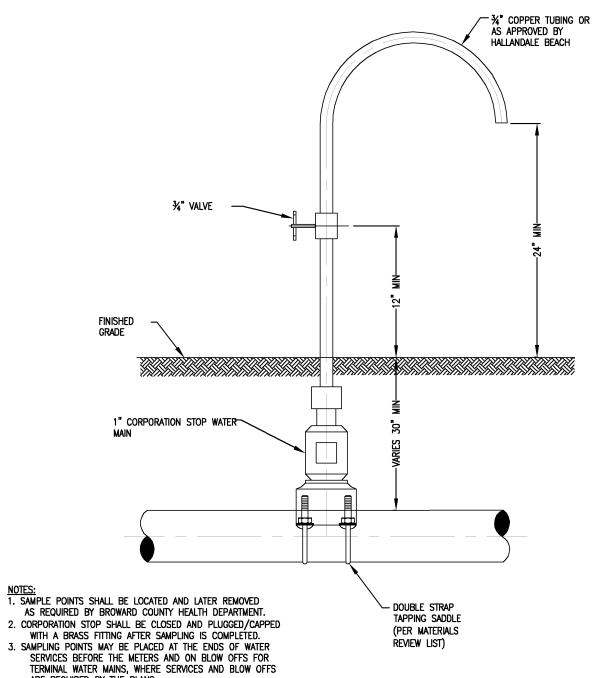

NOTES:
1. SAMPLE POINTS SHALL BE LOCATED AND LATER REMOVED AS REQUIRED BY BROWARD COUNTY HEALTH DEPARTMENT.
2. CORPORATION STOP SHALL BE CLOSED AND PLUGGED/CAPPED WITH A BRASS FITTING AFTER SAMPLING IS COMPLETED.
3. SAMPLING POINTS MAY BE PLACED AT THE ENDS OF WATER SERVICES BEFORE THE METERS AND ON BLOW OFFS FOR TERMINAL WATER MAINS, WHERE SERVICES AND BLOW OFFS ARE REQUIRED BY THE PLANS.

SAMPLING POINT

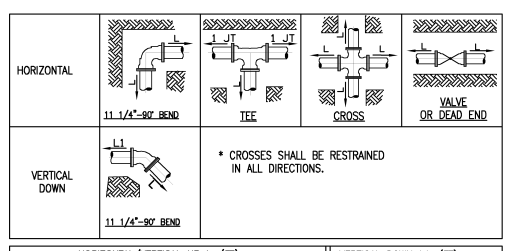

Diameter	HORIZONTAL/VERTICAL UP L, (FT) 11 ¼°	22 ½°	45°	90°	Tee* (Branch)	Valves Dead End	VERTICAL DOWN L1, (FT) 11 ¼°	22 ½°	45°	90°
4	2	5	10	24	50	50	5	10	21	50
6	3	7	14	34	70	70	7	14	29	70
8	4	9	18	43	90	90	9	18	37	90
10	5	10	21	52	109	109	11	22	45	109
12	6	12	25	60	127	127	12	25	52	127
16	7	15	31	75	161	161	16	32	67	161
18	8	16	34	82	177	177	17	35	73	177
20	9	18	37	89	192	192	19	38	80	192
24	10	20	42	102	223	223	22	44	92	223
30	12	24	50	120	264	264	26	53	110	264
36	13	24	56	135	302	302	30	60	125	302
42	15	30	62	149	336	336	33	67	139	336

NOTE:
THE NOTED REQUIREMENTS WERE CALCULATED IN ACCORDANCE WITH "THRUST RESTRAINT FOR DUCTILE IRON PIPE," VERSION 3.3 BY DIPRA, WITH THE FOLLOWING ASSUMPTIONS:

SOIL CONDITIONS: SAND/SILT
LAYING CONDITION: 3
MINIMUM COVER: 2.5 FT
SAFETY FACTOR: 1.5
BARE PIPE

IF FIELD CONDITIONS DIFFER FROM THE ABOVE, CONTRACTOR SHALL NOTIFY HALLANDALE BEACH DPW.

RESTRAINED JOINT REQUIREMENTS

WATER MAIN SEPARATION IN ACCORDANCE WITH F.A.C. RULE 62-555.314

OTHER PIPE	HORIZONTAL SEPARATION	CROSSINGS (1) (5)	JOINT SPACING @ CROSSINGS (FULL JOINT CENTERED)
STORM SEWER, STORM WATER FORCE MAIN, RECLAIMED WATER (2)	Water Main — 3 ft. minimum	Water Main — 12 inches minimum, 6 inches minimum for storm sewer	Alternate 3 ft. minimum — Water Main
VACUUM SANITARY SEWER	Water Main — 10 ft. preferred, 3 ft. minimum	Water Main — 12 inches preferred, 6 inches minimum	Alternate 3 ft. minimum — Water Main
GRAVITY OR PRESSURE SANITARY SEWER, SANITARY SEWER FORCE MAIN, RECLAIMED WATER (4)	Water Main — 10 ft. preferred, 6 ft. minimum	Water Main — 12 inches minimum, 6 inches minimum for gravity sewer	Alternate 6 ft. minimum — Water Main
ON-SITE SEWAGE TREATMENT & DISPOSAL SYSTEM	10 ft. minimum	——	——

(1) WATER MAIN SHOULD CROSS ABOVE OTHER PIPE. WHEN WATER MAIN MUST BE BELOW OTHER PIPE, THE MINIMUM SEPARATION IS 12 INCHES.
(2) RECLAIMED WATER REGULATED UNDER PART III OF CHAPTER 62-610, F.A.C.
(3) 3 FT. FOR GRAVITY SANITARY SEWER WHERE THE BOTTOM OF THE WATER MAIN IS LAID AT LEAST 6 INCHES ABOVE THE TOP OF THE GRAVITY SANITARY SEWER.
(4) RECLAIMED WATER NOT REGULATED UNDER PART III OF CHAPTER 62-610, F.A.C.
(5) 18" MINIMUM SEPARATION REQUIRED BY HALLANDALE BEACH, UNLESS OTHERWISE APPROVED.

WATER MAIN SEPARATION

CALL 48 HOURS BEFORE YOU DIG IN FLORIDA
IT'S THE LAW
1-800-432-4770
SUNSHINE STATE ONE CALL OF FLORIDA, INC.

PRELIMINARY NOT FOR CONSTRUCTION

NO	DATE	REVISION	BY	NO	DATE	REVISION	BY

DESIGNED — DATE —
CHECKED — DATE —
ISSUED FOR — DATE —

Calvin, Giordano & Associates, Inc.
EXCEPTIONAL SOLUTIONS
1800 Eller Drive, Suite 600, Fort Lauderdale, Florida 33316
Phone: 954.921.7781 Fax: 954.921.8807
Certificate of Authorization 514

BEACHWALK
2600 EAST HALLANDALE BEACH BOULEVARD
HALLANDALE BEACH, FL
AGENCY APPROVAL SET - NOT FOR CONSTRUCTION

WATER DISTRIBUTION DETAILS

DOUGLAS R. TAYLOR, P.E.
STATE OF FLORIDA PROFESSIONAL ENGINEER
LICENSE No. 50569
DATE: JANUARY 16, 2012

SCALE 1"=20'
PROJECT No 11-4216
PURPOSE OF THIS SET —
SHEET: —
C302
OF — SHEETS

File Name: P:\Projects\2011\114216 Related Group - Monaco Site Plan\CADD Files\Drawings\C301 WATER DETAILS.dwg - (Plotted by: Monica Morandi on Monday, January 16, 2012 9:51:47 AM)

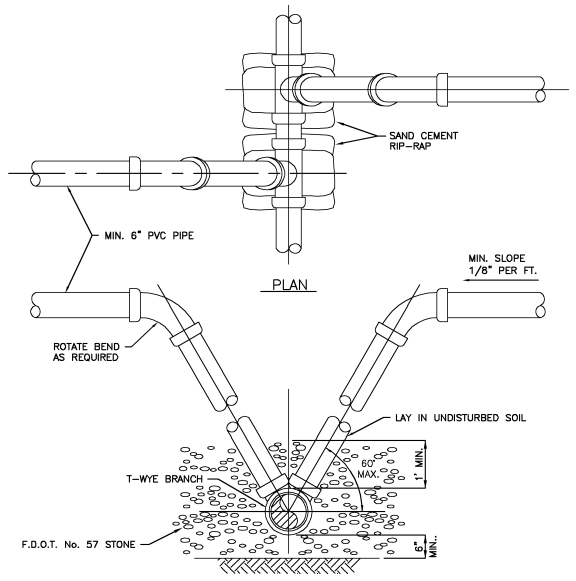

NOTES:

1. MODIFIED RISER CONNECTION TO BE USED ONLY WHEN DIRECTED BY THE CITY.
2. ¾" DRAINFIELD LIMEROCK MAY BE USED AS BEDDING OVER UNDISTURBED SOIL WITH PVC PIPE.
3. SINGLE SERVICE CONNECTIONS SHALL USE 6" PIPE AND FITTINGS.

SANITARY SEWER LATERAL MODIFIED RISER

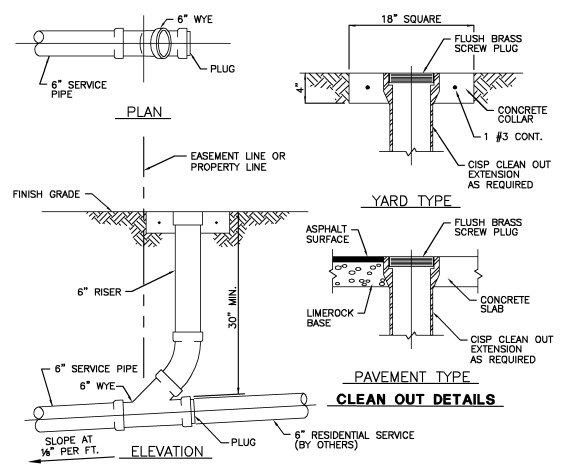

CLEAN OUT DETAILS

SINGLE SERVICE CONNECTION AND CLEAN OUT

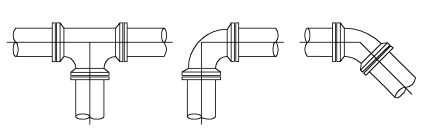

RESTRAINED PIPE LENGTH (LINEAL FEET)					
PIPE SIZE	TEE & WYE	90°BEND	45°BEND	22 1/2°BEND	11 1/4°BEND
6"	27	27	16	9	5
8"	34	34	20	11	6
10"	41	41	24	14	7
12"	48	48	28	16	8
14"	55	55	32	18	10
16"	62	62	35	20	11
18"	69	69	39	22	12
20"	75	75	42	24	13
24"	87	87	49	27	14
30"	104	104	57	31	17
36"	120	120	65	35	19
42"	134	134	72	39	21
48"	147	147	79	42	22
54"	160	160	85	45	24

NOTE: THE FIGURES IN THIS TABLE ARE BASED ON 150 PSI TEST PRESSURE WITH 2.5 FEET OF COVER AND 2000 POUNDS PER SQUARE FOOT SOIL BEARING AGAINST UNDISTURBED TRENCH. A 20% SAFETY FACTOR HAS BEEN ADDED.

RESTRAINED JOINT DETAIL

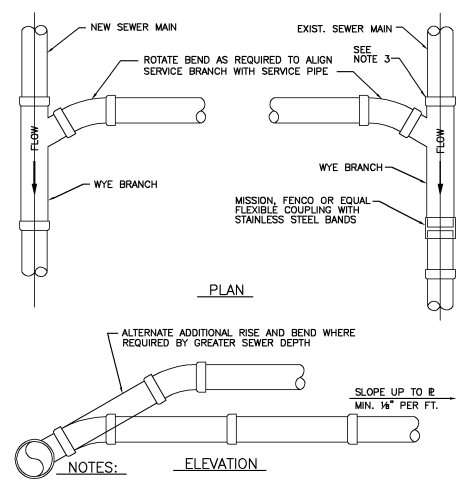

NOTES:

1. SINGLE SERVICE CONNECTIONS SHALL USE 6" PIPE AND FITTINGS.
2. USE RISER CONNECTIONS WHERE INVERT OF SEWER IS GREATER THAN 7'-0" DEEP.
3. WHERE BELL OF WYE AND SPIGOT OF EXISTING MAIN ARE NOT COMPATIBLE, USE A SECOND FLEXIBLE COUPLING.

WYE BRANCH CONNECTION

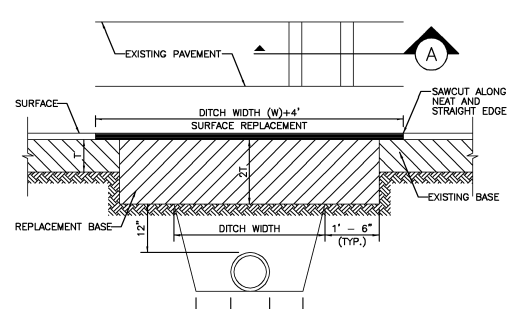

NOTES:

1. REPLACED BASE MATERIAL OVER DITCH SHALL BE TWICE THE THICKNESS OF THE ORIGINAL BASE. MINIMUM 8", MAXIMUM 18".
2. BASE MATERIAL SHALL BE PLACED IN 6" MAXIMUM (LOOSE MEASUREMENT) LAYERS AND EACH LAYER THOROUGHLY ROLLED OR TAMPED TO 98% OF MAXIMUM DENSITY, PER AASHTO T-180.
3. ASPHALT CONCRETE PAVEMENT JOINTS SHALL BE MECHANICALLY SAWED.
4. SURFACED TREATED PAVEMENT JOINTS SHALL BE LAPPED AND FEATHERED.
5. SURFACE MATERIAL WILL BE CONSISTENT WITH THE EXISTING SURFACE.
6. BASE MATERIAL SHALL HAVE A MINIMUM LBR. OF 100 AND A MINIMUM CARBONATE CONTENT OF 70% (60% FOR LOCAL STREETS).
7. IF THE DITCH IS FILLED TEMPORARILY IT SHALL BE COVERED WITH A 2" ASPHALTIC CONCRETE PATCH TO KEEP THE FILL MATERIAL FROM RAVELING UNTIL PLACED WITH A PERMANENT PATCH.

PAVEMENT RESTORATION PERPENDICULAR UTILITY INSTALLATION

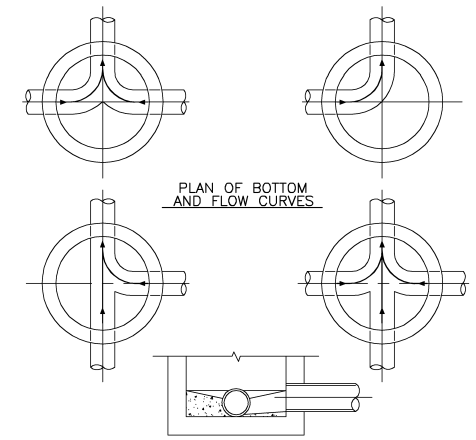

NOTES:

1. INVERT CHANNELS TO BE CONSTRUCTED FOR SMOOTH FLOW WITH NO OBSTRUCTIONS.
2. SPILLWAYS SHALL BE CONSTRUCTED BETWEEN PIPES WITH DIFFERENT INVERT ELEVATIONS PROVIDING SMOOTH FLOWS.
3. CHANNELS FOR FUTURE CONNECTIONS (STUBS) SHALL BE CONSTRUCTED FILLED WITH SAND & COVERED WITH 1" OF MORTAR.
4. WHEN FLOW LINE DEFLECTS MORE THAN 45°, A DROP OF 0.10' IS REQUIRED.

MANHOLE FLOW PATTERNS

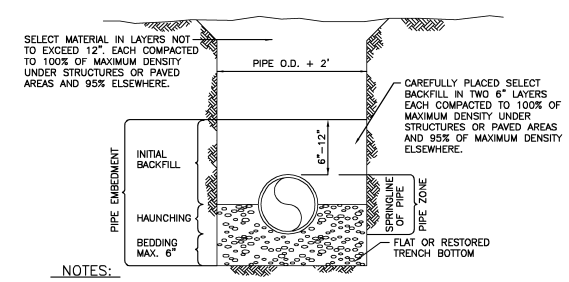

NOTES:

1. BEDDING AND HAUNCHING SHALL BE WELL GRADED ¾" MAX. SIZE CRUSHED LIMEROCK
2. DENSITY TESTING SHALL BE IN ACCORDANCE WITH AASHTO T-180 AND ASTM D-3017.

PIPE LAYING CONDITION (PVC)

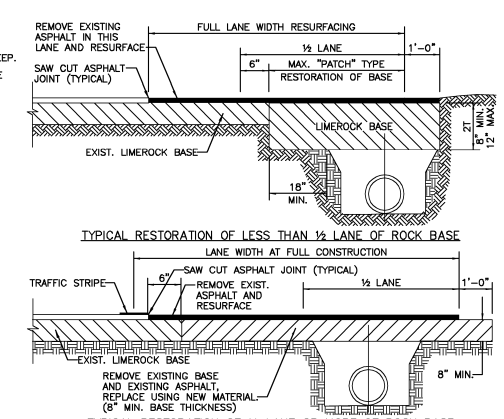

NOTES:

1. BASE MATERIAL SHALL HAVE A MINIMUM LBR OF 100 AND A MINIMUM CARBONATE CONTENT OF 70% (60% FOR LOCAL STREETS).
2. BASE SHALL BE PLACED IN 6" MAXIMUM THICK LAYERS WITH EACH LAYER COMPACTED TO 95% DENSITY PER A.A.S.H.T.O. T-180 AND TESTED PRIOR TO PLACEMENT OF SUCCEEDING LAYERS.
3. SUBGRADE MATERIAL SHALL BE GRANULAR AND ANGULAR AND SHALL HAVE A MINIMUM LBR. OF 40 AND COMPACTED TO 95% DENSITY PER A.A.S.H.T.O. T-180.
4. BACKFILL SHALL BE PLACED AND COMPACTED IN 12" LAYERS; TESTING WILL BEGIN 12" ABOVE THE INSTALLED FACILITY.
5. ALL EDGES OF EXISTING ASPHALT PAVEMENT WHERE RESURFACING WILL ABUT SHALL BE SAWCUT IN STRAIGHT LINES PARALLEL TO OR PERPENDICULAR TO THE ROADWAY, PRIOR TO RESURFACING.
6. RESURFACING MATERIAL SHALL BE CONSISTENT WITH EXISTING SURFACE, AND SHALL BE APPLIED A MINIMUM OF ONE INCH AND A MAXIMUM OF TWO INCHES IN THICKNESS.

PAVEMENT RESTORATION LONGITUDINAL

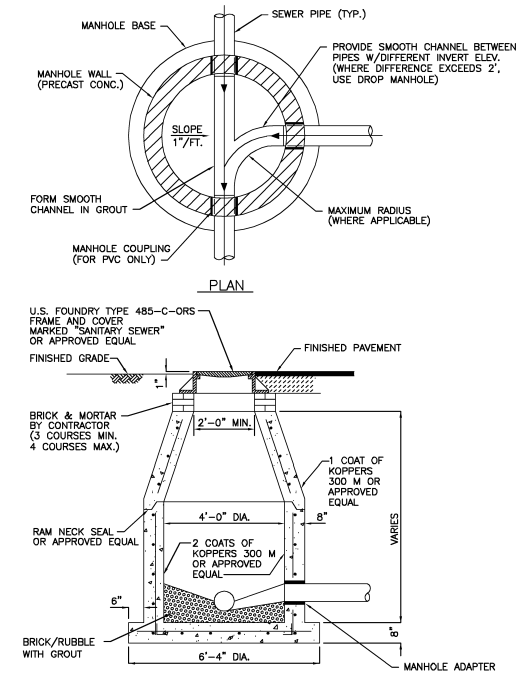

NOTES:

1. SHOP DRAWINGS, SIGNED AND SEALED BY A FLORIDA REGISTERED PROFESSIONAL ENGINEER, SHOWING ALL DIMENSIONS AND CALCULATIONS, INCLUDING CONCRETE REINFORCEMENT, SHALL BE SUBMITTED TO THE CITY PRIOR TO INSTALLATION.
2. THE BOTTOM SLAB SHALL BE CAST MONOLITHICALLY WITH THE LOWER WALL SECTION.

STANDARD PRECAST MANHOLE

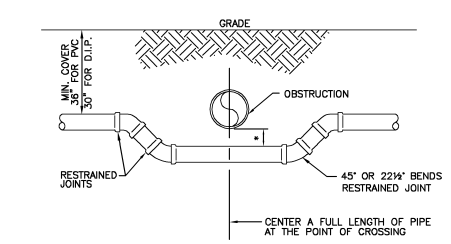

* REFER TO WATER AND SEWER SEPARATION NOTES PER D.E.P. REQUIREMENTS

SPECIAL UTILITY CROSSING FITTING TYPE

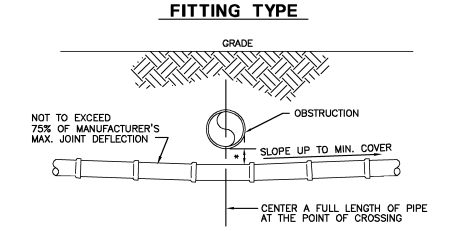

* REFER TO WATER AND SEWER SEPARATION NOTES PER D.E.P. REQUIREMENTS

STANDARD UTILITY CROSSING DEFLECTION TYPE

PRELIMINARY NOT FOR CONSTRUCTION

CALL 48 HOURS BEFORE YOU DIG IN FLORIDA
IT'S THE LAW!
1-800-432-4770
SUNSHINE STATE ONE CALL OF FLORIDA, INC.

NO	DATE	REVISION	BY	NO	DATE	REVISION	BY

DESIGNED — DATE —
CHECKED — DATE —
ISSUED FOR — DATE —

Calvin, Giordano & Associates, Inc.
EXCEPTIONAL SOLUTIONS
1800 Eller Drive, Suite 600, Fort Lauderdale, Florida 33316
Phone: 954.921.7781 Fax: 954.921.8807
Certificate of Authorization 514

BEACHWALK
2600 EAST HALLANDALE BEACH BOULEVARD
HALLANDALE BEACH, FL
AGENCY APPROVAL SET - NOT FOR CONSTRUCTION

SANITARY SEWER DETAILS

DOUGLAS R. TAYLOR, P.E.
STATE OF FLORIDA PROFESSIONAL ENGINEER
LICENSE No. 50569
DATE: JANUARY 16, 2012

SCALE ----
PROJECT No 11-4216
PURPOSE OF THIS SET ----

SHEET: ---
C303
OF --- SHEETS

File Name: P:\Projects\2011\114216 Related Group - Manero Site Plan\CADD Files\Drawings\C302 SANITARY SEWER DETAILS.dwg - (Plotted by: Monica Morandi on Monday, January 16, 2012 9:52:01 AM)

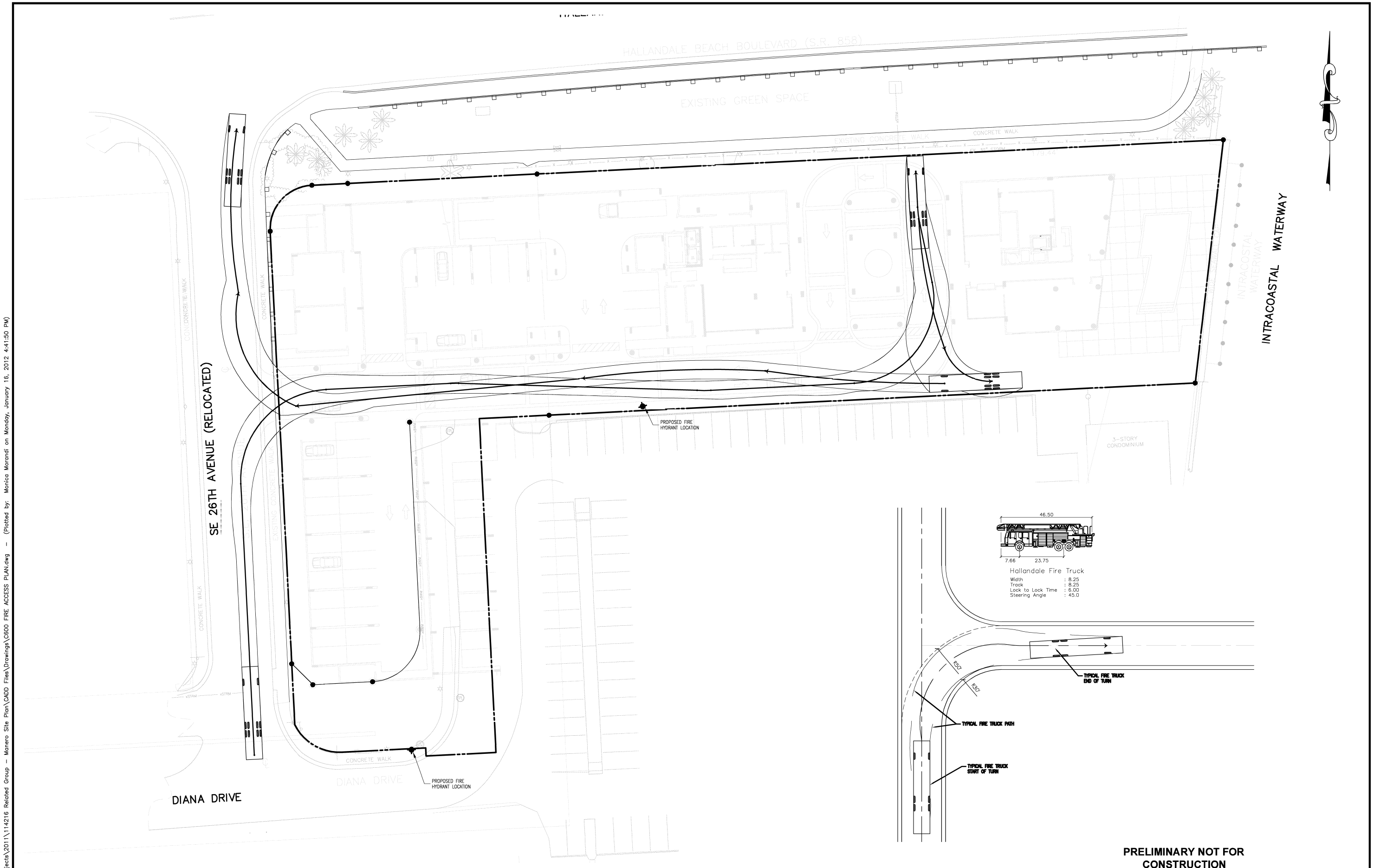

PRELIMINARY NOT FOR CONSTRUCTION

File Name: P:\Projects\2011\114216 Related Group - Manero Site Plan\CADD Files\Drawings\C600 FIRE ACCESS PLAN.dwg - (Plotted by: Monica Morandi on Monday, January 16, 2012 4:41:50 PM)

NO	DATE	REVISION	BY	NO	DATE	REVISION	BY

DESIGNED ---
DATE ---
CHECKED ---
DATE ---
ISSUED FOR ---
DATE ---

Calvin, Giordano & Associates, Inc.
EXCEPTIONAL SOLUTIONS
1800 Eller Drive, Suite 600, Fort Lauderdale, Florida 33316
Phone: 954.921.7781 Fax: 954.921.8807
Certificate of Authorization 514

BEACHWALK
2600 EAST HALLANDALE BEACH BOULEVARD
HALLANDALE BEACH, FL

AGENCY APPROVAL SET - NOT FOR CONSTRUCTION

FIRE ACCESS PLAN

DOUGLAS R. TAYLOR, P.E.
STATE OF FLORIDA PROFESSIONAL ENGINEER
LICENSE No. 50569

DATE: JANUARY 16, 2012

SCALE ---
PROJECT No 11-4216
PURPOSE OF THIS SET ---

SHEET: ---
C600
OF --- SHEETS

GENERAL NOTES AND SPECIFICATIONS

I. APPLICABLE CODES

1. ALL WORK AND MATERIALS SHALL CONFORM TO CURRENT BROWARD COUNTY, FLORIDA DEPARTMENT OF ENVIRONMENTAL PROTECTION AND THE CITY OF HALLANDALE BEACH PUBLIC WORKS DEPARTMENT STANDARDS AND SPECIFICATIONS AS WELL AS ALL OTHER LOCAL, STATE, AND NATIONAL CODES AND REGULATORY REQUIREMENTS, AS APPLICABLE.

2. THE CONTRACTOR SHALL BE RESPONSIBLE FOR ENSURING THAT ALL CONSTRUCTION SHALL BE DONE IN A SAFE MANNER AND IN STRICT COMPLIANCE WITH ALL THE REQUIREMENTS OF FEDERAL OCCUPATIONAL SAFETY AND HEALTH ACT OF 1970, AND ALL STATE AND LOCAL SAFETY AND HEALTH REGULATIONS.

3. LOCATIONS, ELEVATIONS AND DIMENSIONS OF EXISTING UTILITIES, STRUCTURES AND OTHER SITE FEATURES SHOWN ON THE DRAWINGS ARE BASED ON UTILITY ATLAS AND LIMITED SURVEY BY CALVIN- GIORDANO AND ASSOCIATES. HENCE CONTRACTOR MUST EXERCISE CAUTION DURING EXCAVATION WORKS FOR POSSIBLE UNDERGROUND UTILITIES.

4. EXISTING UTILITIES SHOWN ON THE PLAN ARE ACCORDING TO THE INFORMATION AVAILABLE TO THE ENGINEER AND HAVE NOT BEEN INDEPENDENTLY VERIFIED BY THE ENGINEER. ALL EXISTING UNDERGROUND UTILITIES SHOWN ON THE PLANS ARE FOR REFERENCE ONLY. THE CONTRACTOR SHALL SOFT DIG AND VERTICALLY AND HORIZONTALLY LOCATE ALL EXISTING UTILITIES CROSSING THE PROPOSED DRAINAGE NETWORK PRIOR TO THE COMMENCEMENT OF THE CONSTRUCTION. INFORMATION OBTAINED SHALL BE FORWARDED TO THE DESIGN ENGINEER OF RECORD. ALL COST ASSOCIATED WITH THIS WORK SHALL BE DEEMED INCIDENTAL TO THE BID PRICE

5. ELEVATIONS SHOWN ON THE PLANS ARE BASED ON THE 1929 N.G.V.D.

6. EXISTING UTILITIES TO BE ADJUSTED IN ACCORDANCE WITH PROPOSED GRADES AND REQUIREMENTS OF UTILITY OWNERS, AS REQUIRED.

7. EXISTING STRUCTURES, UTILITIES AND OTHER IMPROVEMENTS WHICH ARE TO REMAIN IN PLACE, SUCH AS TREES, BUILDING SEWERS, DRAINS, WATER OR GAS PIPES, CONDUITS, POLES, WALLS, COLUMNS, ETC., WHETHER OR NOT SHOWN ON THE PLANS, ARE TO BE CAREFULLY PROTECTED FROM DAMAGE. IF DAMAGE OCCURS FROM WORK PERFORMED UNDER THIS CONTRACT, THE CONTRACTOR SHALL PROMPTLY REPAIR THE DAMAGED ITEM(S) TO THE CONDITION OF THE ITEM(S) PRIOR TO THE DAMAGE. THIS WORK SHALL BE AT NO ADDITIONAL COST TO THE OWNER.

8. THE CONTRACTOR IS TO USE CAUTION WHEN WORKING IN OR AROUND AREAS OF OVERHEAD TRANSMISSION LINES AND UNDERGROUND UTILITIES.

9. CONTRACTOR SHALL PRESERVE ALL STREET SIGNS, PARKING METERS, BENCHES, TRAFFIC CONTROL SIGNS, ETC. WHEN DIRECTED BY THE ENGINEER, THE CONTRACTOR SHALL REINSTALL OR DELIVER SAID PUBLIC PROPERTY TO THE CITY YARD.

10. THE CONTRACTOR SHALL COORDINATE WORK WITH ANY OTHER UTILITY AND BUILDING TRADES WORKING ON THIS OR ADJACENT PROJECT.

11. ALL DITCH EXCAVATION SHALL BE PERFORMED IN FULL COMPLIANCE WITH THE PROVISIONS OF THE FLORIDA TRENCH SAFETY ACT.

12. THE CONTRACTOR SHALL TAKE SPECIAL NOTE OF SOIL CONDITIONS THROUGHOUT THIS PROJECT. ANY SPECIAL SHORING, SHEETING OR OTHER PROCEDURES NECESSARY TO PROTECT ADJACENT PROPERTY, EITHER PUBLIC OR PRIVATE, DURING EXCAVATION OF SUBSOIL MATERIAL OR DURING THE FILLING OF ANY AREA, OR FOR ANY OPERATION DURING CONSTRUCTION SHALL BE THE SOLE RESPONSIBILITY OF THE CONTRACTOR.

II. PRECONSTRUCTION RESPONSIBILITIES

1. THE INFORMATION PROVIDED IN THESE PLANS IS TO ASSIST THE CONTRACTOR IN ASSESSING THE NATURE AND EXTENT OF THE CONDITIONS WHICH MAY BE ENCOUNTERED DURING THE COURSE OF THE WORK. ALL CONTRACTORS ARE DIRECTED, PRIOR TO BIDDING, TO CONDUCT ANY INVESTIGATIONS THEY DEEM NECESSARY TO ARRIVE AT THEIR OWN CONCLUSIONS REGARDING THE ACTUAL CONDITIONS THAT WILL BE ENCOUNTERED AND UPON WHICH THEIR BIDS WILL BE BASED.

2. 48 HOURS BEFORE BEGINNING CONSTRUCTION IN THE AREA, THE CONTRACTOR SHALL NOTIFY SUNSHINE STATE CALL ONE OF FLORIDA, INC. AT 1-800-432-4770 AND ANY OTHER UTILITIES WHICH MIGHT BE AFFECTED.

3. UPON THE RECEIPT OF THE "NOTICE TO PROCEED", THE CONTRACTOR SHALL CONTACT THE ENGINEER OF RECORD AND ARRANGE A PRECONSTRUCTION CONFERENCE TO INCLUDE ALL INVOLVED GOVERNMENTAL AGENCIES, UTILITY OWNERS, THE OWNER, AND THE ENGINEER OF RECORD.

4. THE CONTRACTOR SHALL APPLY FOR AND PROCURE ALL PERMITS AND LICENSES, PAY ALL CHARGES, TAXES, ROYALTIES & FEES, AND GIVE ALL NOTICES NECESSARY TO COMPLETE THIS PROJECT. (WITH THE EXCEPTION OF DRAINAGE AND APPROVALS FROM BROWARD COUNTY (EPGMD), THE SOUTH FLORIDA WATER MANAGEMENT DISTRICT AND THE SOUTH FLORIDA DEPARTMENT OF ENVIRONMENTAL PROTECTION, AS WELL AS THE REQUIRED FDOT PERMITS, WHICH WILL BE OBTAINED BY THE ENGINEER OF RECORD.)

5. THE CONTRACTORS SHALL COORDINATE WITH UTILITY COMPANIES TO ARRANGE FOR ANY REMOVAL, RELOCATION AND TEMPORARY SUPPORT OF UTILITY FEATURES, ETC. AS NECESSARY TO COMPLETE THE WORK, IF APPLICABLE.

6. THE LOCATIONS OF THE UTILITIES SHOWN IN THE PLANS ARE APPROXIMATE ONLY. THE CONTRACTOR SHALL LOCATE AND EXPOSE ALL EXISTING UTILITIES TO BE CONNECTED SUFFICIENTLY AHEAD OF CONSTRUCTION TO ALLOW REDESIGN BY THE ENGINEER IF SUCH UTILITIES ARE FOUND TO BE DIFFERENT THAN THOSE SHOWN ON PLANS.

III. INSPECTION AND TESTING

1. THE CONTRACTOR SHALL NOTIFY THE ENGINEER OF RECORD AT LEAST 48 HOURS PRIOR TO BEGINNING CONSTRUCTION AND PRIOR TO THE INSPECTION OF THE FOLLOWING ITEMS:

   A. STORM DRAINAGE PRIOR TO BACKFILL
   B. DRAINAGE WELL TESTING
   C. STORM DRAINAGE LAMPING
   D. SUBGRADE – SUBMIT AND HAVE APPROVED DENSITIES PRIOR TO PLACEMENT OF ROCK.
   E. LIMEROCK BASE – SUBMIT AND HAVE APPROVED DENSITIES AND AS-BUILTS PRIOR TO THE PLACEMENT OF ANY ASPHALT.
   F. ASPHALTIC CONCRETE
   G. FINAL WALK-THROUGH INSPECTION
   H. PUMP STATION START-UP.

2. IT IS THE RESPONSIBILITY OF THE CONTRACTOR TO CONTACT ALL APPLICABLE REGULATORY AGENCIES FOR INSPECTION REQUIREMENTS.

3. FORCEMAIN TESTING AND CLEANING

   A. THE COMPLETE FORCEMAIN SYSTEM SHALL BE PRESSURE TESTED. THE PRESSURE TEST SHALL BE FOR TWO HOUR AT 150 PSI MINIMUM TEST PRESSURE IN ACCORDANCE WITH ANSI/AWWA C600-05 OR LATEST REVISION. THE PRESSURE TEST SHALL NOT VARY MORE THAN 5 PSI DURING THE TEST. LEAKAGE ALLOWANCES WILL NOT BE MADE FOR FITTINGS OR VALVES. MAXIMUM LENGTH OF TEST PIPE SECTION SHALL BE 2000 FT. REPUMPING OF LINE DURING PRESSURE TEST SHALL NOT BE ALLOWED.

ALLOWABLE LEAKAGE SHALL NOT EXCEED THE FORMULA OF:

$$Q=LD\sqrt{P}/148{,}000$$

Q=QUANITY OF MAKEUP WATER (TESTING ALLOWANCE), IN GALLONS PER HOUR
L=LENGTH OF PIPE SECTION BEING TESTED, IN FEET
D=NOMINAL DIAMETER OF THE PIPE, IN INCHES
P=AVERAGE TEST PRESSURE DURING THE HYDROSTATIC TEST,IN LBS/SQ.IN.(GAUGE)

A. THE PRESSURE TEST SHALL BE WITNESSED BY A REPRESENTATIVE OF THE PERMITTING MUNICIPALITY UTILITIES DEPARTMENT AND THE ENGINEER OF RECORD.

B. CLEANING OF NEWLY INSTALLED PIPING SYSTEMS SHALL BE ACCOMPLISHED USING PIPE PIGGING METHODS. OPEN FLUSHING SHALL NOT BE ALLOWED WITHOUT PRIOR APPROVAL OF THE UTILITIES DEPARTMENT. ALL WATER WILL BE ACCOUNTED FOR.

IV. SHOP DRAWINGS

PRIOR TO CONSTRUCTION OR INSTALLATION, SHOP DRAWINGS SHALL BE SUBMITTED TO AND APPROVED BY THE ENGINEER OF RECORD FOR THE FOLLOWING ITEMS: CATCH BASINS AND ALL OTHER DRAINAGE STRUCTURES (INCLUDING PUMP STATIONS), DRAINAGE PIPES, AND FLAP GATES. IN ADDITION, SOME CITIES, COUNTIES, STATE AND/OR NATIONAL REGULATORY AGENCIES REQUIRE THEIR OWN INDIVIDUAL REVIEW AND APPROVAL. IT IS THE RESPONSIBILITY OF THE CONTRACTOR TO OBTAIN ALL OTHER AGENCY SHOP DRAWING APPROVALS IF REQUIRED.

V. TEMPORARY FACILITIES

1. IT SHALL BE THE CONTRACTOR'S RESPONSIBILITY TO ARRANGE FOR OR SUPPLY TEMPORARY WATER SERVICE, SANITARY FACILITIES, AND ELECTRICITY, DURING CONSTRUCTION.

2. THE CONTRACTOR SHALL MAINTAIN AT LEAST ONE TRAFFIC LANE AT ALL TIMES.

3. THE CONTRACTOR SHALL MAINTAIN A CLEAR PATH FOR ALL SURFACE WATER DRAINAGE STRUCTURES AND DITCHES DURING ALL PHASES OF CONSTRUCTION.

VI. TRAFFIC REGULATION

1. THE CONTRACTOR SHALL PROVIDE ALL WARNING SIGNALS, SIGNS, LIGHTS AND FLAG PERSONS AS NECESSARY FOR THE MAINTENANCE OF TRAFFIC WITHIN PUBLIC RIGHT-OF-WAYS IN ACCORDANCE WITH M.U.T.C.D., FDOT AND BROWARD COUNTY TRAFFIC ENGINEERING DIVISION.

2. ALL OPEN TRENCHES AND HOLES ADJACENT TO ROADWAYS OR WALKWAYS SHALL BE PROPERLY MARKED AND BARRICADED TO ASSURE THE SAFETY OF BOTH VEHICULAR AND PEDESTRIAN TRAFFIC.

3. NO TRENCHES OR HOLES NEAR WALKWAYS, IN ROADWAYS OR THEIR SHOULDERS ARE TO BE LEFT OPEN DURING NIGHTTIME HOURS WITHOUT THE EXPRESS PERMISSION OF THE CITY OF HALLANDALE BEACH.

4. CONTRACTOR IS TO MAINTAIN 2-WAY TRAFFIC ON DIANA DRIVE AT ALL TIMES

VII. PROJECT CLOSEOUT

1. CLEANING UP

   A. DURING CONSTRUCTION, THE PROJECT SITE AND ALL ADJACENT AREAS SHALL BE MAINTAINED IN A NEAT AND CLEAN MANNER, AND UPON FINAL CLEANUP, THE PROJECT SITE SHALL BE LEFT CLEAR OF ALL SURPLUS MATERIAL OR TRASH. THE PAVED AREAS SHALL BE SWEPT BROOM CLEAN.

   B. THE CONTRACTOR SHALL RESTORE OR REPLACE, WHEN AND AS DIRECTED, ANY PUBLIC OR PRIVATE PROPERTY DAMAGED BY HIS/HER WORK, EQUIPMENT AND/OR EMPLOYEES TO A CONDITION AT LEAST EQUAL TO THAT EXISTING IMMEDIATELY PRIOR TO THE BEGINNING OF OPERATIONS.

   C. THE CONTRACTOR SHALL REPLACE ALL PAVING, STABILIZED EARTH, CURBS, DRIVEWAYS, SIDEWALKS, FENCES, MAILBOXES, SIGNS AND ANY OTHER IMPROVEMENTS REMOVED DURING CONSTRUCTION WITH THE SAME TYPE OF MATERIAL AND TO THE CONDITION WHICH EXISTED PRIOR TO THE BEGINNING OF OPERATIONS.

   D. WHERE MATERIAL OR DEBRIS HAVE WASHED OR FLOWED INTO, OR HAVE BEEN PLACED IN WATER COURSES, DITCHES, DRAINS, CATCH BASINS, OR ELSEWHERE AS A RESULT OF THE CONTRACTOR'S OPERATIONS, SUCH MATERIAL OR DEBRIS SHALL BE REMOVED AND SATISFACTORILY DISPOSED OF DURING THE PROGRESS OF THE WORK, AND THE AREA KEPT IN A CLEAN AND NEAT CONDITION.

   E. ALL DISPOSAL OF EXCESS AND UNSUITABLE EXCAVATED MATERIAL, DEMOLITION, VEGETATION, RUBBISH AND DEBRIS SHALL BE MADE OUTSIDE THE LIMITS OF CONSTRUCTION AT A LEGAL DISPOSAL SITE PROVIDED BY THE CONTRACTOR AT HIS/HER OWN EXPENSE, WITH THE PRIOR APPROVAL OF THE ENGINEER. MATERIAL CLEARED FROM THE SITE SHALL NOT BE DEPOSITED ON ADJACENT AND/OR NEARBY PROPERTY.

2. ALL PROPERTY MONUMENTS OR PERMANENT REFERENCES, REMOVED OR DESTROYED BY THE CONTRACTOR DURING CONSTRUCTION SHALL BE RESTORED BY A STATE OF FLORIDA REGISTERED LAND SURVEYOR AT THE CONTRACTOR'S EXPENSE.

3. PROJECT RECORD DOCUMENTS

   A. DURING THE DAILY PROGRESS OF THE JOB, THE CONTRACTOR SHALL RECORD ON HIS SET OF CONSTRUCTION DRAWINGS THE EXACT LOCATION, LENGTH AND ELEVATION OF ANY FACILITY NOT BUILT EXACTLY ACCORDING TO PLANS.

   B. THE CONTRACTOR SHALL PROVIDE THE ENGINEER WITH AS-BUILT GRADES AND LOCATIONS OF FINISHED PAVEMENT, SIDEWALKS, CURBS, AND ALL PHYSICAL IMPROVEMENTS. SUCH GRADES SHALL BE OBTAINED BY A LICENSED SURVEYOR REGISTERED TO PRACTICE IN THE STATE OF FLORIDA, AND SHALL DOCUMENT THE INTENT OF THE PROPOSED GRADES SHOWN ON THE PLANS. THIS SHALL BE DONE AT NO COST TO THE OWNER. SPECIFICALLY SHOP DRAWINGS ARE TO INCLUDE:
      a. ALL STRUCTURE RIM, INVERT AND BOTTOM ELEVATIONS.
      b. TOP OF PIPE ELEVATION FOR STORM WATER FORCEMAIN ALL BENDS, VALVES, TEE'S ETC.
      c. CONNECTION OF ALL ABOVE GROUND PUMPS, TANKS, ETC. LOCATED AT EACH PUMP STATION LOCATION.

VIII. STORM DRAINAGE

1. GENERAL

   A. CATCH BASIN GRATES AND MANHOLE RIM ELEVATIONS AS SHOWN ON PLANS SHALL BE ADJUSTED TO CONFORM TO NEW OR EXISTING GRADES, AS REQUIRED.

2. ALL DRAINAGE CATCH BASINS AND STRUCTURES SHALL BE PRECAST CONCRETE AS MANUFACTURED BY U.S. PRECAST CORPORATION OR APPROVED EQUAL.

3. ALL DRAINAGE CATCH BASIN FRAMES AND GRATES, AND STORM DRAINAGE MANHOLE RIMS SHALL BE AS MANUFACTURED BY U.S. FOUNDRY OR APPROVED EQUAL.

4. SOLID DRAINAGE PIPE SHALL BE REINFORCED CONCRETE PIPE (R.C.P.).

5. PROVIDE A MINIMUM PROTECTIVE COVER OF 30 INCHES OVER STORM SEWER AND AVOID UNNECESSARY CROSSING BY HEAVY CONSTRUCTION VEHICLES DURING CONSTRUCTION.

6. THE CONTRACTOR SHALL PROTECT COMPLETED DRAINAGE STRUCTURES FROM CONTAMINATION OF SILT AND CONSTRUCTION DEBRIS. PLACE PLYWOOD ON, OR FILTER FABRIC BETWEEN, THE FRAME AND INLET GRATE UNTIL CONSTRUCTION OPERATIONS ARE FINISHED.

IX. PAVING

1. GENERAL

   A. ALL UNDERGROUND UTILITIES SHALL BE COMPLETED PRIOR TO CONSTRUCTION OF LIMEROCK BASE.

   B. ALL EXISTING PAVEMENT, CUT OR DAMAGED BY CONSTRUCTION SHALL BE PROPERLY RESTORED AT THE CONTRACTOR'S EXPENSE.

   C. WHERE ANY PROPOSED PAVEMENT IS TO BE CONNECTED TO EXISTING PAVEMENT, THE EXISTING EDGE OF PAVEMENT SHALL BE SAW CUT.

   D. PROPOSED ASPHALT PAVEMENT SHALL BE CONNECTED TO EXISTING AS PER MIAMI-DADE COUNTY STANDARD DETAILS. CONTRACTOR SHALL MATCH EXISTING ELEVATIONS ON NEW SIDEWALK OR NEW PAVEMENT.

   E. CONTRACTOR SHALL REMOVE AND DISPOSE OF THE EXISTING CONC. CURB, CURB & GUTTER, SIDEWALK AND ASPHALT WHERE NEW SIDEWALK, CURB & GUTTER AND MEDIAN IS PROPOSED TO BE CONSTRUCTED.

   F. NONE OF THE EXISTING LIMEROCK BASE THAT IS REMOVED IS TO BE INCORPORATED INTO THE PROPOSED LIMEROCK BASE.

   G. CONTRACTOR TO RESTORE DRIVEWAY AND CURB & GUTTER PER MIAMI DADE COUNTY PUBLIC WORKS STANDARDS.

2. TESTING

   A. DENSITY TESTS SHALL BE TAKEN BY AN INDEPENDENT TESTING LABORATORY, CERTIFIED BY THE STATE OF FLORIDA, WHERE DIRECTED BY THE CITY OF HALLANDALE BEACH INSPECTOR OR THE GEOTECHNICAL ENGINEER. DENSITY TESTS TO BE PERFORMED AT CONTRACTORS EXPENSE. DENSITY TEST RESULT ARE TO BE REVIEWED AND APPROVED BY THE ENGINEER OF RECORD.

X. PAVEMENT MARKINGS AND TRAFFIC SIGNS

1. PAVEMENT MARKINGS

A. INSTALLATION: ALL PAVEMENT MARKINGS SHALL BE MADE IN ACCORDANCE WITH FDOT STANDARD INDEX #17346, WHERE SHOWN ON THE PLANS.

B. MATERIALS:

   1) WHERE THE PLANS CALL FOR PAINTED PAVEMENT MARKINGS (P), INSTALLATION AND MATERIALS SHALL MEET ALL REQUIREMENTS OF SECTION 710 OF FDOT STANDARD SPECIFICATIONS FOR ROAD AND BRIDGE CONSTRUCTION.

   2) WHERE THE PLANS CALL FOR THERMOPLASTIC PAVEMENT MARKINGS (T), INSTALLATION AND MATERIALS SHALL MEET ALL REQUIREMENTS OF SECTION 710 OF FDOT STANDARD SPECIFICATIONS FOR ROAD AND BRIDGE CONSTRUCTION.

C. PROTECTION: THE CONTRACTOR SHALL NOT ALLOW TRAFFIC ONTO NEWLY APPLIED PAVEMENT STRIPING/MARKINGS UNTIL THEY ARE SUFFICIENTLY DRY TO PERMIT VEHICLES TO CROSS THEM WITHOUT DAMAGE. THE CONTRACTOR SHALL, AT HIS OWN EXPENSE, REMOVE AND REPLACE ANY PORTION OF THE PAVEMENT STRIPING/MARKINGS DAMAGED BY PASSING TRAFFIC OR FROM ANY OTHER CAUSE.

2. TRAFFIC SIGNS

A. INSTALLATION: TRAFFIC SIGNS SHALL BE INSTALLED IN ACCORDANCE WITH THE U.S. DEPARTMENT OF TRANSPORTATION MANUAL OF UNIFORM TRAFFIC CONTROL DEVICES (M.U.T.C.D.), PART II, IN LOCATIONS SHOWN ON PLANS.

B. MATERIALS: FOLLOW SECTION NO. 700, HIGHWAY SIGNING, OF THE FDOT STANDARD SPECIFICATIONS FOR ROAD AND BRIDGE CONSTRUCTION, AND M.U.T.C.D.

XI. GRAVITY SEWER COLLECTION SYSTEM:

A. GENERAL:

1. MANHOLE RIM ELEVATIONS AS SHOWN ON PLANS MAY BE ADJUSTED TO CONFORM TO NEW OR EXISTING GRADES.

2. DISTANCES AND LENGTHS SHOWN ON PLANS AND PROFILE DRAWINGS ARE REFERENCED TO THE CENTER OF STRUCTURES.

B. MATERIALS:

1. ALL P.V.C. SEWER PIPE AND FITTINGS INSTALLED ABOVE AN INVERT ELEVATION OF -6.0 N.G.V.D. SHALL BE UN-PLASTICIZED, NON-PRESSURE POLYVINYL CHLORIDE (P.V.C.) PIPE CONFORMING TO ASTM 0 3034 WITH SDR 26 AND INTEGRAL WALL BELL AND SPIGOT JOINTS. RUBBER SEALING RINGS FOR PIPE JOINTS SHALL MEET THE REQUIREMENTS OF ASTM 0 1869.

2. ALL P.V.C. SEWER PIPE AND FITTINGS INSTALLED BELOW AN INVERT ELEVATION OF -6.0 N.G.V.D. AND ABOVE AN INVERT ELEVATION OF -9.0 N.G.V.D. SHALL BE ASTM D-3034 AND AWWA C900-97 PRESSURE PIPE CLASS 150, DR18, INTEGRAL BELL, CONTAINING A LOCKED-IN RING SPIGOT JOINT FOR GRAVITY SEWER CONSTRUCTION.

3. ALL P.V.C. SEWER PIPE AND FITTINGS INSTALLED BELOW AN INVERT ELEVATION OF -9.0 N.G.V.D. SHALL BE ASTM D-3034 AND AWWA C900-97 PRESSURE PIPE CLASS 200, DR14, INTEGRAL BELL, CONTAINING A LOCKED-IN RING SPIGOT JOINT FOR GRAVITY SEWER CONSTRUCTION.

4. DUCTILE IRON PIPE (D.I.P.) SHALL BE CEMENT LINED INSIDE AND SHALL HAVE A COAT TAR EPOXY COATING, MANUFACTURED IN ACCORDANCE WITH ANSI/AWWA C-151/A21.51-96, OR LATEST REVISION; MINIMUM PIPE THICKNESS SHALL BE PRESSURE CLASS 350 (UNLESS OTHERWISE SPECIFIED).

5. MANHOLES SHALL BE PRECAST CONCRETE CONFORMING TO ASTM C 478. CONCRETE SHALL ATTAIN A MINIMUM COMPRESSION STRENGTH OF WITH 4000 PSI AT 28 DAYS, THE BASE AND WALLS THAT COMPOSE THE BOTTOM SECTION SHALL BE OF MONOLITHIC CONSTRUCTION. REINFORCEMENT BARS AND STEEL SHALL BE AS A MINIMUM WHAT IS SHOWN ON THE DRAWINGS.

C. INSTALLATION:

1. PVC SEWER PIPE SHALL BE LAID IN ACCORDANCE WITH ASTM D 2321 AND THE UNI-BELL PLASTIC PIPE ASSOCIATION'S "RECOMMENDED PRACTICE FOR THE INSTALLATION OF PVC SEWER PIPE."

2. DIP SHALL BE INSTALLED IN ACCORDANCE WITH ANSI/AWWA C600-93, OR LATEST REVISION.

3. ALL SEWER PIPES SHALL BE TRUE TO LINE AND GRADE WITH BELLS UPGRADE. JOINTS SHALL BE CAREFULLY FITTED SO AS TO ENSURE A TIGHT WATERPROOF JOINT.

4. BEDDING SHALL CONFORM WITH THE DETAIL DRAWINGS.

5. MANHOLES SHALL BE SET PLUMB TO LINE AND GRADE ON FIRM SUBGRADE PROVIDING UNIFORM BEARING UNDER THE BASE.

6. THE ENTIRE INSIDE OF THE MANHOLES SHALL BE PAINTED WITH TWO COATS OF DIFFERENT COLORS (8 MILS EACH) OF KOPPERS 300-M BITUMASTIC PAINT OR ENGINEER'S APPROVED EQUAL. THE OUTSIDE OF EACH MANHOLE REQUIRES ONLY ONE COAT (8 MILS) OF THE SAME TYPE OF PAINT.

D. TESTING:

1. UTILIZATION OF CONNECTIONS TO AN EXISTING GRAVITY SEWER SYSTEM, IF APPLICABLE, SHALL BE ALLOWED AFTER THE COMPLETE CONNECTING SYSTEM HAS BEEN TESTED AND APPROVED BY THE MUNICIPALITY.

2. UPON COMPLETION OF THE WORK AND PRIOR TO PLACEMENT OF ASPHALT. EACH SECTION OF SEWER PIPE SHALL BE LAMPED IN THE PRESENCE OF THE ENGINEER AND MUST SHOW A FULL CIRCLE OF LIGHT BETWEEN MANHOLES. ALL DEFECTS DISCLOSED BY THE INSPECTION ARE TO BE CORRECTED. BROKEN OR CRACKED PIPES ARE TO BE REPLACED, ALL DEPOSITS REMOVED AND THE SEWERS LEFT TRUE TO LINE AND GRADE, ENTIRELY CLEAN AND READY FOR USE.

3. TESTS FOR WATER TIGHTNESS SHALL BE MADE IN THE PRESENCE OF THE ENGINEER. INFILTRATION LEAKAGE UNDER NORMAL EXTERIOR GROUND WATER PRESSURE SHALL NOT EXCEED 100 GALLONS PER INCH DIAMETER PER MILE OF PIPE FOR 24 HOURS. FOR PIPE ABOVE THE NATURAL WATER TABLE,

4. EXFILTRATION LEAKAGE SHALL BE TESTED BY MAINTAINING A STATIC HEAD OF WATER OF TWO FEET ABOVE THE CROWN OF THE PIPE DURING THE TEST. EXFILTRATION FROM INDIVIDUAL MANHOLES SHALL NOT EXCEED 4 GALLONS IN 25 HOURS.

5. UPON COMPLETION OF THE VISUAL INSPECTION AND INFILTRATION/EXFILTRATION TEST, A TELEVISION INSPECTION SHALL BE MADE BY THE CONTRACTOR. A VIDEO RECORDING SHALL BE APPROVED BY THE MUNICIPALITY BEFORE FINAL ACCEPTANCE FOR MAINTENANCE.

XII. WATER DISTRIBUTION AND / OR SEWAGE FORCE MAIN SYSTEM:

A. GENERAL:

1. THE EQUIPMENT AND MATERIALS SPECIFIED HEREIN IS INTENDED TO BE STANDARD PIPE, FITTING, VALVES, AND APPURTENANCES USED IN TRANSPORTING WATER OR WASTEWATER.

2. PIPING, FITTINGS, VALVES, AND APPURTENANCES SHALL BE INSTALLED IN THOSE LOCATIONS AND DEPTHS SHOWN ON THE PLANS.

B. MATERIALS:

1. ALL MATERIALS SPECIFIED FOR USE IN WATER DISTRIBUTION AND SEWER COLLECTION SYSTEM CONSTRUCTION, AS IT PERTAINS TO THE CITY OF HALLANDALE BEACH UTILITY JURISDICTION, MUST CONFORM TO AWWA (AMERICAN WATER WORKS ASSOCIATION) STANDARDS AND BE OF DOMESTIC MANUFACTURE ONLY.

2. BACKFLOW ASSEMBLY DEVICES; ALTHOUGH THE CITY OF HALLANDALE BEACH UTILITIES NO LONGER REQUIRES THE PURCHASE OF SUCH DEVICES THROUGH ITS UTILITY DIVISION, IT CONTINUES RECOMMENDATION OF THE FOLLOWING MANUFACTURERS. WATTS FEBCO, AND HERSEY

3. THE CITY OF HALLANDALE UTILITIES DEPARTMENT STILL MAINTAINS RESPONSIBILITY FOR MAINTENANCE AND REPLACEMENT OF ITS MANY PREVIOUSLY INSTALLED DEVICES. ASSEMBLY DEVICES ARE INCLUSIVE OF:

4. BACKFLOW ASSEMBLIES OR REDUCED PRESSURE ZONE DESIGN, DOUBLE CHECK VALVE ASSEMBLIES AND DOUBLE CHECK VALVE ASSEMBLIES AND DOUBLE DETECTOR CHECK VALVE ASSEMBLIES FOR FIRE LINE INSTALLATIONS.

5. BOXES METERS; MANUFACTURER; ALL BOXES, COVERS AND LIDS SHALL BE TRAFFIC BEARING AND MUST BE BROOKS PRODUCTS OR CITY APPROVED EQUAL.

6. COUPLINGS METER: 3/4" THRU I" BRASS METER COUPLINGS. MANUFACTURER MUELLER. ONLY MODEL #H-10890.

7. FITTINGS: DUCTILE IRON, (MJ) MECHANICAL JOINT, CEMENT LINED 4" AND LARGER. MANUFACTURERS: MUELLER, CLOW. AMERICAN DARLNG, TYLER OR CITY APPROVED EQUAL. INCLUSIVE OF ELBOWS, BENDS, SLEEVES, CONNECTING PIECES, REDUCERS, S-BENDS, TEES, PLUGS, CAPS, REDUCING FLANGES, OFFSETS, ADAPTERS, CROSSES AND OTHER RELATED FITTINGS.

8. FITTINGS, PVC: PVC/CPVC SCHEDULE 80 FITTINGS I.E. ELBOWS, COUPLINGS, BUSHINGS, ADAPTERS, TEES AND LIKE ITEMS. MANUFACTURER: SPEARS, COLONIAL OR CITY APPROVED EQUAL.

9. FIRE HYDRANTS: MANUFACTURERS: MUELLER MODEL SUPER CENTURION 200 5, 1/4" SIZE REFERENCE CATALOG NO A-423 AND AMERICAN DARLING MODEL B-84-B 5,1/4" SIZE. ANY DEVIATION FROM REQUIRED WILL REQUIRE APPROVAL.

10. PIPE: DUCTILE IRON PIPE 4" THRU 8", CLASS 52 (OR EQUIVALENT) 12" THRU 24" CLASS 50 (OR EQUIVALENT). MANUFACTURER: US PIPE, MCSWAIN, CLOW OR CITY APPROVED EQUAL. C-900 PVC PIPE 4" OR GREATER SAME MANUFACTURER RECOMMENDATION AS D.I.P. – SERVICE SUPPLY LINE AND MAIN SUPPLY LINE 1" THRU 3". PVC PIPE, SCHEDULE 80 SOLVENT WELD, MANUFACTURER: SPEARS COLONIAL OR CITY APPROVED EQUAL. POLYETHYLENE PIPE AND TUBING FOR SPECIFIC AREAS WITHIN CITY JURISDICTION AND DETERMINED BY UTILITIES DEPARTMENT. MANUFACTURER: DRISCOPIPE BRAND, ONLY. VARYING MANUFACTURERS OF OTHER PIPE PRODUCTS CONTINGENT UPON CITY APPROVED EQUAL, VIA UTILITY DEPARTMENT.

11. SADDLES SERVICE: TAP SERVICE 1" THRU 2" ONLY. MANUFACTURER: FORD STYLE FI01 & F202 OR CITY APPROVED EQUAL. D.I.P., DOUBLE STRAP DESIGN. C900 AND OTHER PVC SIZES, STAINLESS STEEL DOUBLE BAND SADDLE DESIGN, FORD STYLE 202BS. ALL I.P. THREAD.

12. SLEEVES. TAPPING: MANUFACTURERS: MUELLER, AMERICAN DARLING, OR CITY APPROVED EQUAL. TAPPING CROSSES REQUIRE CITY UTILITY APPROVAL.

13. STOPS CORPORATION: MANUFACTURER: MUELLER, MODEL #H-10046 OR FORD FB 1700 2" OR A.Y. MCDONALD ONLY, INLET MALE IP THREAD AND OUTLET FEMALE IP THREAD.

14. STOPS, CURB: BALL CURB STOPS 3/4" THRU 1 ". MANUFACTURER: FORD ONLY, 3/4" MODEL #BL11-233WR 360 DEG. ROTATION – 1" MODEL BL11-344-4.5WR 360 REG ROTATION.

15. VALVE BOXES & COVERS: MANUFACTURER: 5,1/4" SHAFT 2-PIECE, OPELICKA NO. 19. OR TYLER 3 TOP AND COVER NO. 54 – BOTTOM SECTION NO. 61. NO SUBSTITUTIONS.

16. VALVES, GATE: BRASS VALVES 3" OR LESS IN DIAMETER SHALL BE NIBCO-SCOTT T-133 OR T-136 ONLY, NO SUBSTITUTIONS.

17. LARGE VALVES OVER 3" THRU 16" IN DIAMETER, MUST BE RESILIENT SEAT AND BI-DIRECTIONAL FLOW ONLY. MANUFACTURERS; MUELLER, CLOW, AMERICAN DARLING, AVK OR CITY APPROVED EQUAL, VALVES FOR SPECIAL APPLICATION WILL REQUIRE CITY UTILITY APPROVAL.

18. VALVES TAPPING; RESILIENT SEAT ONLY, MANUFACTURERS: MUELLER, CLOW, AMERICAN DARLING, AVK OR CITY APPROVED EQUAL.

C. MATERIALS:

1. PIPE: THE WATER MAIN SHALL BE EITHER POLYVINYL CHLORIDE (PVC) OR DUCTILE IRON PIPE (DIP) AND SHALL BE DESIGNED FOR A MINIMUM WORKING PRESSURE OF 150 PSI.

   a) PVC PIPE SHALL BE ASTM 1120 PRESSURE PIPE WITH IRON O.D., CLASS 150 (DR 18), CONFORMING TO ANSI/AWWA C900-97 OR LATEST REVISION AND SHALL HAVE PUSH RUBBER GASKET JOINTS AND IRON PIPE O.D.

   b) DUCTILE IRON WATER PIPE SHALL BE CLASS 350 WALL THICKNESS (UP TO 12"), CLASS 300 (14"-18"), CLASS 250 (20" OR GREATER) WITH INTERIOR CEMENT LINING AND EXTERIOR COAL TAR COATING CONFORMING TO ANSI/AWWA C151/A21.51-02, OR LATEST REVISION. SEWAGE PIPE SHALL BE EITHER DOUBLE CEMENT CONFORMING TO ANSI/AWWA CI04/A21.4-03 OR LATEST REVISION, OR POLYETHYLENE LINED CONFORMING TO ANSI/AWWA C105/A21.5-05 OR LATEST REVISION, OR APPROVED EQUAL. THE PIPE SHALL WITHSTAND A WORKING PRESSURE OF 350 PSI. THE JOINTS SHALL BE BELL AND SPIGOT PUSH ON TYPE, MECHANICAL JOINT OR FLANGED. FLANGED PIPE SHALL CONFORM WITH THE PHYSICAL AND CHEMICAL REQUIREMENTS AS SET FORTH IN THE HANDBOOK OF DUCTILE IRON PIPE OF THE CAST IRON PIPE RESEARCH ASSOCIATION.

2. FITTINGS: FITTINGS FOR MAINS 4" AND LARGER SHALL BE D.I.P. MECHANICAL JOINT CONFORMING TO ANSI/AWWA C110/A21, 10-03 OR LATEST REVISION, COMPLETE WITH RETAINER GLANDS, M.J. GASKETS, T-BOLTS AND NUTS.

3. VALVES: VALVES SHALL BE GATE VALVES FOR WATER (4" AND LARGER), OR PLUG VALVES FOR SEWER (ALL SIZES) UNLESS OTHERWISE INDICATED; IRON BODY, FULLY RESILIENT SEAT BRONZED MOUNTED NON-RISING STEM, RARED AT 200 PSI AND CONFORMING TO ANSI/AWWA C509-01 OR LATEST REVISION, AND SHALL HAVE MECHANICAL JOINTS.

   a) GATE VALVES 4" AND UP SHALL BE AMERICAN DARLING (LINE 80) OR CLOW F-6100, RESILIENT SEATED GATE VALVES OR APPROVED EQUAL BY THE MUNICIPALITY,

   b) TAPPING VALVES SHALL BE CLOW OR AMERICAN DARLING.

   c) GATE VALVES 3" OR LESS SHALL BE NIBCO T-133 OR T-136 WITH MALLEABLE HAND WHEELS. NO SUBSTITUTIONS ALLOWED.

   d) BUTTERFLY VALVES SHALL COMPLY WITH ANSI/AWWA STANDARD C504-9 4

4. TAPPING SLEEVES SHALL BE MUELLER H615 OR APPROVED EQUAL.

5. VALVE BOXES SHALL BE OPELIKA NO. 19.

6. DRESSER COUPLINGS SHALL BE REGULAR BLACK COUPLINGS WITH PLAIN GASKETS FOR GALVANIZED STEEL PIPE. THEY SHALL BE DRESSER STYLE 90. NO SUBSTITUTIONS ALLOWED.

7. FIRE HYDRANTS SHALL BE MUELLER CENTURION TRAFFIC TYPE OF A-423 (5 1/4" MAIN VALVE OPENING). MAIN VALVE OPENING TO BE DETERMINED BY THE WATER DEPARTMENT. ALL HYDRANTS TO BE INSTALLED WITH CONTROL VALVE. RETAINER GLANDS ARE PREFERRED FOR RESTRAINING. FIRE HYDRANTS SHALL COMPLY WITH ANSI/AWWA C502-05 RETAINER GLANDS:

   a) A BLUE REFLECTIVE PAVEMENT MARKER SHALL BE PROVIDED IN THE CENTER OF THE NEAREST LANES OF ROAD PAVEMENT ADJACENT TO ALL FIRE HYDRANT LOCATIONS.

   b) RETAINER GLANDS SHALL CONFORM TO AWWA STANDARD C111/A21, 11-00, OR LATEST REVISION.

   c) ALL GLANDS SHALL BE MANUFACTURED FROM DUCTILE IRON AS LISTED BY UNDERWRITER'S LABORATORY FOR 250 PSI MINIMUM WATER PRESSURE RATING.

   d) GLANDS SHALL BE CLOW CORPORATION MODEL F-1058 OR STANDARD FIRE PROTECTION EQUIPMENT COMPANY OR APPROVED.

   e) FOR PVC PIPE, GLANDS SHALL BE "MEGALUG" SERIES 200.

   f) A REFLECTIVE PAVEMENT MARKER SHALL BE INSTALLED IN THE CENTER OF THE NEAREST LANE OF ROAD PAVEMENT ADJACENT TO ALL VALVE LOCATIONS OUTSIDE THE ROAD PAVEMENT. WATER MARKERS SHALL BE WHITE, SEWER MARKERS SHALL BE GREEN.

8. DETECTOR TAPE:

   DETECTOR TAPE SHALL BE 3" WIDE BLUE TAPE FOR WATER MAIN AND BROWN TAPE FOR FORCE MAIN, WITH A METALLIZED FOIL CORE LAMINATED BETWEEN 2 LAYERS OF PLASTIC FILM. THE WORDS "CAUTION WATER LINE BURIED BELOW" OR "CAUTION FORCE MAIN BURIED BELOW" SHALL BE PRINTED AT 30" INTERVALS ALONG THE TAPE. TAPE SHALL BE PLACED 18" BELOW GRADE ABOVE ALL PVC MAINS AND SERVICES OR AS RECOMMENDED BY MANUFACTURER. NON-METALLIC TAPE SHALL BE USED ABOVE DUCTILE IRON PIPE.

9. SERVICE CONNECTIONS:

   a) SERVICE SADDLES SHALL BE DUCTILE IRON WITH LOW ALLOY STEEL STRAPS. SADDLES SHALL CONFORM TO ANSI/AWWA C111/21.11-00 AND ASTM A-588 OF LATEST REVISION.

   b) POLYVINYL CHLORIDE (PVC) SCHEDULE 80 PIPE AND SCHEDULE 80 FITTINGS, DETECTOR TAPE TO BE USED ON ALL PVC PIPE. SOLVENT WELDED PVC FITTINGS ONLY.

   c) SERVICE LINES SHALL BE POLYETHYLENE (PE) TUBING AS DESCRIBED IN ANSI/AWWA C901-02 OR LATEST REVISION, WITH A WORKING PRESSURE OF 200 PSI (DR 9). PIPE JOINTS SHALL BE OF THE COMPRESSION TYPE TOTALLY CONFINED GRIP SEAL AND COUPLING NUT. POLYETHYLENE SHALL BE EXTRUDED FROM PE 3408 HIGH MOLECULAR WEIGHT MATERIAL AND MUST CONFORM TO ASTM D-2737.

   d) CORPORATION STOPS SHALL BE MANUFACTURED OF BRASS ALLOY IN ACCORDANCE ASTM B-62 WITH THREADED ENDS AND BE FORD OR APPROVED EQUAL.

   e) METER STOPS SHALL BE LOCKWING TYPE AND SHALL BE OF BRONZE CONSTRUCTION IN ACCORDANCE WITH ASTM B-62. METER STOPS SHALL BE CLOSED BUTTON DESIGN AND RESILIENT "O" RING SEALED AGAINST EXTERNAL LEAKAGE AT THE TOP. STOPS SHALL BE EQUIPPED WITH A METER COUPLING NUT ON THE OUTLET SIDES, AS MANUFACTURED BY FORD OR APPROVED EQUAL.

10. TAPPING SLEEVES: TAPPING SLEEVES SHALL BE CAST IRON, MECHANICAL JOINT, CLOW MODEL F5207, OR APPROVED EQUAL.

11. VALVE BOXES:

   a) VALVE BOXES FOR WATER MAINS AND SEWER FORCE MAINS SHALL BE U.S. FOUNDRY MODEL 7500, MARKED "WATER" OR "SEWER", OR APPROVED EQUAL.

   b) VALVE BOXES FOR BLOW-OFF ASSEMBLY SHALL BE U.S. FOUNDRY MODEL 7630, OR APPROVED EQUAL.

PRELIMINARY NOT FOR CONSTRUCTION

NO	DATE	REVISION	BY	NO	DATE	REVISION	BY

DESIGNED —
DATE —
CHECKED —
DATE —
ISSUED FOR —
DATE —

Calvin, Giordano & Associates, Inc.
EXCEPTIONAL SOLUTIONS
1800 Eller Drive, Suite 600, Fort Lauderdale, Florida 33316
Phone: 954.921.7781 Fax: 954.921.8807
Certificate of Authorization 514

BEACHWALK
2600 EAST HALLANDALE BEACH BOULEVARD
HALLANDALE BEACH, FL
AGENCY APPROVAL SET - NOT FOR CONSTRUCTION

GENERAL NOTES AND SPECIFICATIONS

DOUGLAS R. TAYLOR, P.E.
STATE OF FLORIDA PROFESSIONAL ENGINEER
LICENSE No. 50569

DATE: JANUARY 16, 2012

SCALE —
PROJECT No 11-4216
PURPOSE OF THIS SET —
SHEET: —
C700
OF — SHEETS

File Name: P:\Projects\2011\114216 Related Group – Manero Site Plan\CADD Files\Drawings\C700 GENERAL NOTES AND SPECIFICATIONS.dwg – (Plotted by: Monica Morandi on Monday, January 16, 2012 9:53:43 AM)

12. RETAINER GLANDS: RETAINER GLANDS SHALL CONFORM TO ANSI/AWWA C111/A21. 11-00 OR LATEST REVISION. ALL GLANDS SHALL BE MANUFACTURED FROM DUCTILE IRON AS LISTED BY UNDERWRITERS LABORATORIES FOR 250 PSI MINIMUM WATER PRESSURE RATING. CLOW CORPORATION, TYLER, EBAA IRON, OR APPROVED EQUAL.

13. DOUBLE CHECK VALVE BACKFLOW PREVENTION ASSEMBLY: THE ASSEMBLY SHALL CONFORM TO ANSI/AWWA C510-97, OR LATEST REVISION, AND BE CAPABLE OF WITHSTANDING A WORKING PRESSURE OF AT LEAST 150 PSI WITHOUT DAMAGE TO WORKING PARTS OR IMPAIRMENT OF FUNCTION. IT SHALL CONSIST OF TWO INTERNALLY LOADED INDEPENDENTLY OPERATING CHECK VALVES LOCATED BETWEEN TWO TIGHTLY CLOSING RESILIENT-SEATED SHUT OFF VALVES, WITH FOUR PROPERLY PLACED RESILIENT-SEATED TEST COCKS.

D. INSTALLATION:

1. NO CONNECTION TO AN EXISTING MAIN SHALL BE MADE BEFORE PRESSURE TESTS FOR THE NEW MAIN, INCLUDING BACTERIOLOGICAL SAMPLES FOR NEW WATER MAINS, HAVE BEEN ACCEPTED BY THE LOCAL GOVERNING AGENCY.

2. D.I.P. SHALL BE INSTALLED IN ACCORDANCE WITH ANSI/AWWA C600-05, OR LATEST REVISION.

3. P.V.C. PIPE SHALL BE INSTALLED IN ACCORDANCE WITH THE UNI-BELL PLASTIC PIPE ASSOCIATION'S "GUIDE FOR INSTALLATION OF PVC PRESSURE PIPE FOR MUNICIPAL WATER DISTRIBUTION SYSTEM".

4. A 14-GAUGE MULTI-STRAND WIRE SHALL BE INSTALLED THE LENGTH OF PVC PIPE. THE WIRE SHALL BE BROUGHT UP AT EVERY VALVE WITH A MINIMUM OF 4 FEET EXCESS WIRE COILED AT EACH VALVE.

XIII. D.E.P. WATER AND SEWER SEPARATION NOTES

A. SANITARY SEWERS AND FORCE MAINS SHOULD CROSS UNDER WATER MAINS WHENEVER POSSIBLE. SANITARY SEWERS AND FORCE MAINS CROSSING WATER MAINS SHALL BE LAID TO PROVIDE A MINIMUM VERTICAL DISTANCE OF 18 INCHES BETWEEN THE INVERT OF THE UPPER PIPE AND THE CROWN OF THE LOWER PIPE WHENEVER POSSIBLE.

B. WHERE SANITARY SEWERS FORCE MAINS MUST CROSS A WATER MAIN WITH LESS THAN 18 INCHES VERTICAL DISTANCE, BOTH THE SEWER AND THE WATER MAIN SHALL BE CONSTRUCTED OF DUCTILE IRON PIPE (DIP) AT THE CROSSING. SUFFICIENT LENGTHS OF DIP MUST BE USED TO PROVIDE A MINIMUM SEPARATION OF 10 FEET BETWEEN ANY TWO JOINTS. ALL JOINTS ON THE WATER MAIN WITHIN 20 FEET OF THE CROSSING MUST BE MECHANICALLY RESTRAINED; A MINIMUM VERTICAL CLEARANCE OF 6 INCHES MUST BE MAINTAINED AT ALL CROSSINGS.

C. ALL CROSSINGS SHALL BE ARRANGED SO THAT THE SEWER PIPE JOINTS AND THE WATER MAIN PIPE JOINTS ARE EQUIDISTANT FROM THE POINT OF CROSSING (PIPES CENTERED ON THE CROSSING).

D. A MINIMUM 10 FOOT HORIZONTAL SEPARATION SHALL BE MAINTAINED BETWEEN ANY TYPE OF SEWER AND WATER MAIN IN PARALLEL INSTALLATIONS WHENEVER POSSIBLE.

E. IN CASES WHERE IT IS NOT POSSIBLE TO MAINTAIN A 10 FOOT HORIZONTAL SEPARATION, THE WATER MAIN MUST BE LAID IN A SEPARATE TRENCH OR ON AN UNDISTURBED EARTH SHELF LOCATED ON ONE SIDE OF THE SEWER OR FORCE MAIN AT SUCH AN ELEVATION THAT THE BOTTOM OF THE WATER MAIN IS AT LEAST 18 INCHES ABOVE THE TOP OF THE SEWER.

F. WHERE IT IS NOT POSSIBLE TO MAINTAIN A VERTICAL DISTANCE OF 18 INCHES IN PARALLEL INSTALLATIONS, THE WATER MAIN SHALL BE CONSTRUCTED OF DIP AND THE SANITARY SEWER AND THE FORCE MAIN SHALL BE CONSTRUCTED OF DIP WITH A MINIMUM VERTICAL DISTANCE OF 6 INCHES. THE WATER MAIN SHOULD ALWAYS BE ABOVE THE SEWER. JOINTS ON THE WATER MAIN SHALL BE LOCATED AS FAR APART AS POSSIBLE FROM JOINTS ON THE SEWER OR FORCE MAIN (STAGGERED JOINTS).

G. ALL DIP SHALL BE CLASS 150 OR HIGHER. ADEQUATE PROTECTIVE MEASURES AGAINST CORROSION SHALL BE USED AS DETERMINED BY THE DESIGN.

PRELIMINARY NOT FOR CONSTRUCTION

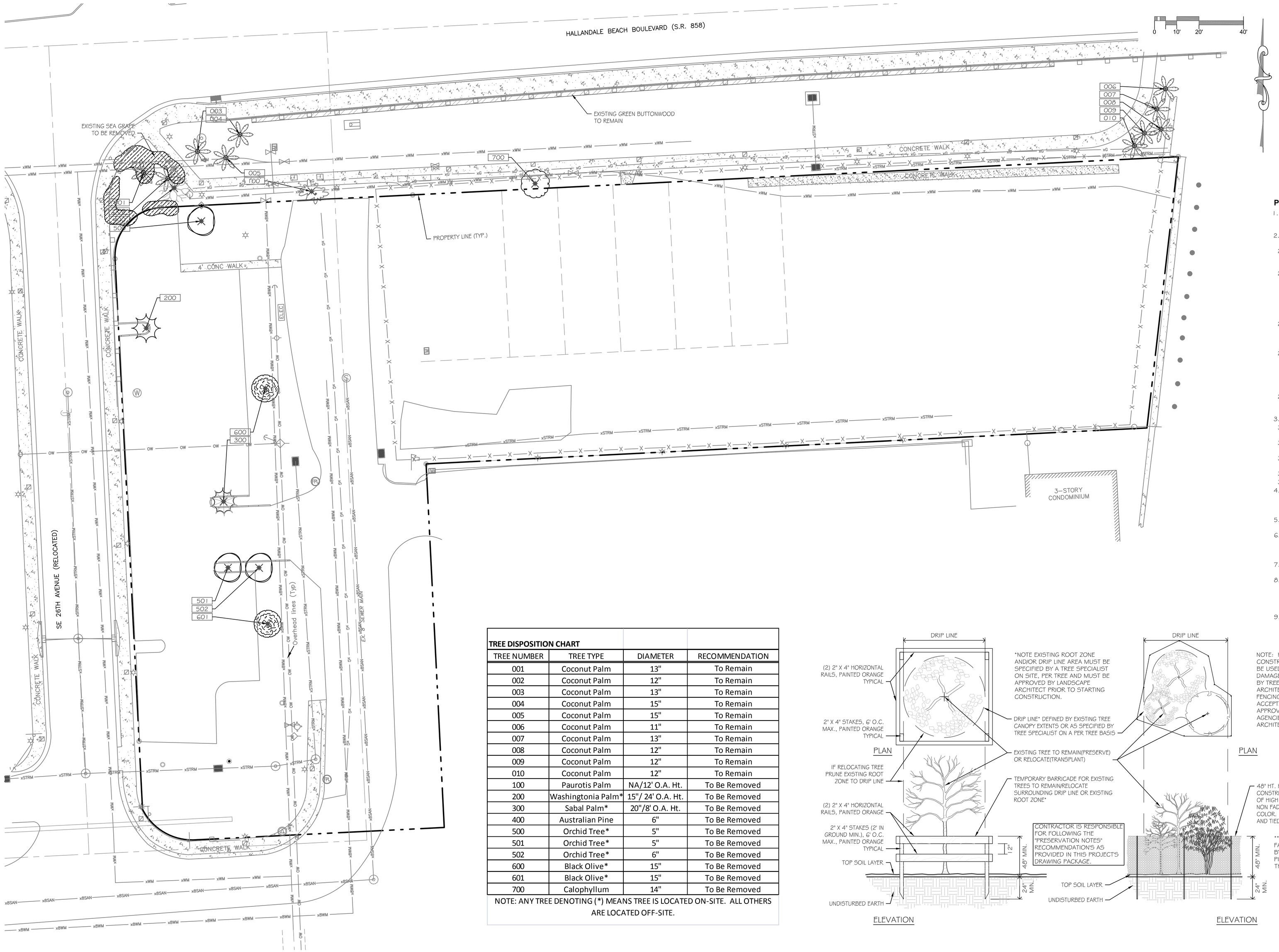

LEGEND OF SYMBOLS

- EXISTING TREE TO REMAIN
- EXISTING TREE TO BE REMOVED
- EXISTING TREE TO BE REMOVED NO MITIGATION REQUIRED DUE TO DISEASE, STRUCTURAL DAMAGE, OR POOR QUALITY SPECIMEN.
- EXISTING TREE TO BE RELOCATED
- RECEPTOR SITE FOR RELOCATED TREE
- PROPOSED TREE
- 001 — EXISTING TREE NUMBER
- QV — PROPOSED TREE SYMBOL
- 1 — PROPOSED QUANTITY

PRESERVATION NOTES:

1. THE OWNER OR DESIGNATED REPRESENTATIVE SHALL VERIFY THE CONDITION AND TAG ALL MATERIAL TO BE RELOCATED OR REMOVED PRIOR TO ANY CONSTRUCTION ACTIVITY.
2. PRESERVED TREES (TO REMAIN OR RELOCATE) SHALL BE BARRICADED/FENCED BEFORE AND DURING CONSTRUCTION:
   - 2.a. THE GENERAL CONTRACTOR IS RESPONSIBLE FOR PRESERVING AND PROTECTING ALL EXISTING VEGETATION (INCLUDING TREES, PALMS, SHRUBS & GROUND COVERS) NOTED ON PLANS.
   - 2.b. THE TEMPORARY FENCING SHOWN ON PLAN(S) ARE APPROXIMATIONS ONLY. EXACT LOCATIONS FOR FENCING SHALL BE MADE IN THE FIELD BY THE OWNER'S REPRESENTATIVE OR TREE SPECIALIST IN ORDER TO DETERMINE THE ACTUAL DRIP LINE LOCATION FOR THE TREE(S). EXISTING GROUND ELEVATION AROUND DRIP LINES OF THE PRESERVED TREES WILL NOT BE CHANGED.
   - 2.c. REFER TO "PROTECTIVE FENCING/BARRICADE DETAIL" ON THE "STANDARD PLANTING DETAILS" SHEET FOR APPROVED METHOD(S) OF BARRICADING/FENCING AND THE DRIP LINE DEFINITION.
   - 2.d. IF DURING THE COURSE OF CONSTRUCTION ANY OF THE PROTECTED VEGETATION DIES, IT SHALL BE REPLACED, AS REQUIRED BY THE LOCAL JURISDICTION, BY THE CONTRACTOR WITH EQUAL SIZE AND CALIPER. WHERE SUPPLEMENTAL LANDSCAPING INFRINGES ON THIS AREA, DISTURBANCE SHALL BE MINIMIZED.
   - 2.e. COMPLETELY REMOVE BARRICADES WHEN CONSTRUCTION HAS PROGRESSED TO THE POINT THAT THEY ARE NO LONGER NEEDED AND WHEN APPROVED BY THE LANDSCAPE ARCHITECT.
3. PROTECT ROOT ZONES OF ALL TREES AND PLANTS:
   - 3.a. DO NOT ALLOW VEHICULAR TRAFFIC AND PARKING WITHIN THE FENCED AREA.
   - 3.b. DO NOT STORE MATERIALS OR PRODUCTS NEAR TREES OR PLANTS.
   - 3.c. PREVENT DUMPING OF REFUSE OR CHEMICALLY INJURIOUS MATERIALS OR LIQUIDS.
   - 3.d. PREVENT PUDDLING OR CONTINUOUS RUNNING WATER.
   - 3.e. CAREFULLY SUPERVISE ALL WORK TO PREVENT DAMAGE.
4. CONSULT THE OWNER DESIGNATED REPRESENTATIVE OR LANDSCAPE ARCHITECT AND REMOVE AGREED-ON ROOTS AND BRANCHES WHICH INTERFERE WITH CONSTRUCTION WORK AREA PRIOR TO INITIATING SITE CLEARING.
5. EMPLOY QUALIFIED TREE SPECIALIST TO REMOVE BRANCHES, AND TREAT ANY CUTS.
6. ALL EXOTIC PLANTS, AS DEFINED BY THE LOCAL JURISDICTION, SHALL BE REMOVED WITHIN THE LIMIT OF WORK. A FOLLOW-UP MAINTENANCE PLAN SHALL BE IMPLEMENTED TO PREVENT RE-INVASION OF EXOTIC VEGETATION.
7. COMPLETELY REMOVE BARRICADES WHEN CONSTRUCTION HAS ENDED, AND/OR WHEN APPROVED BY THE LANDSCAPE ARCHITECT.
8. CONTRACTOR IS RESPONSIBLE FOR OBTAINING ANY AND ALL PERMITS FOR TREE REMOVAL/RELOCATION AS WELL ANY BONDS REQUIRED, FROM THE GOVERNING AGENCIES. CONTRACTOR SHALL PROVIDE FOR MITIGATION, AS REQUIRED, PRIOR TO CLEARING LAND AND OBTAINING A BUILDING PERMIT.
9. REFER TO PROPOSED PLANTING PLANS FOR ADDITIONAL REQUIREMENTS AND NOTES.

TREE DISPOSITION CHART

TREE NUMBER	TREE TYPE	DIAMETER	RECOMMENDATION
001	Coconut Palm	13"	To Remain
002	Coconut Palm	12"	To Remain
003	Coconut Palm	13"	To Remain
004	Coconut Palm	15"	To Remain
005	Coconut Palm	15"	To Remain
006	Coconut Palm	11"	To Remain
007	Coconut Palm	13"	To Remain
008	Coconut Palm	12"	To Remain
009	Coconut Palm	12"	To Remain
010	Coconut Palm	12"	To Remain
100	Paurotis Palm	NA/12' O.A. Ht.	To Be Removed
200	Washingtonia Palm*	15"/ 24' O.A. Ht.	To Be Removed
300	Sabal Palm*	20"/8' O.A. Ht.	To Be Removed
400	Australian Pine	6"	To Be Removed
500	Orchid Tree*	5"	To Be Removed
501	Orchid Tree*	5"	To Be Removed
502	Orchid Tree*	6"	To Be Removed
600	Black Olive*	15"	To Be Removed
601	Black Olive*	15"	To Be Removed
700	Calophyllum	14"	To Be Removed

NOTE: ANY TREE DENOTING (*) MEANS TREE IS LOCATED ON-SITE. ALL OTHERS ARE LOCATED OFF-SITE.

NOTE: HIGH VISIBILITY PLASTIC CONSTRUCTION FENCING SHALL BE USED IN AREAS OF MINIMAL DAMAGE POTENTIAL AS DEEMED BY TREE SPECIALIST & LANDSCAPE ARCHITECT. OTHER TEMPORARY FENCING METHODS MAY BE ACCEPTABLE BUT MUST BE APPROVED BY THE GOVERNING AGENCIES AND LANDSCAPE ARCHITECT.

File Name: P:\Projects\2011\114216 Related Group - Manero Site Plan\CADD Files\Drawings\11-4216-LE-100-PLNT.dwg - (Plotted by: Erin Sudman on Tuesday, January 17, 2012 9:35:14 AM)

NO	DATE	REVISION	BY
1	9/22/11	REVISED PER DRC COMMENTS	EMS
2	10/20/11	REVISED PER DRC COMMENTS	EMS
3	01/17/12	REVISED PER PROPERTY LINE CHANGE	EMS

DESIGNED EMS DATE 6/29/11
CHECKED MC DATE ----
ISSUED FOR ---- DATE ----

Calvin, Giordano & Associates, Inc.
EXCEPTIONAL SOLUTIONS
1800 Eller Drive, Suite 600, Fort Lauderdale, Florida 33316
Phone: 954.921.7781 Fax: 954.921.8807
Certificate of Authorization LC00000339

BEACHWALK
2600 EAST HALLANDALE BEACH BOULEVARD
HALLANDALE BEACH, FLORIDA
SITE PLAN APPROVAL SET - NOT FOR CONSTRUCTION

TREE DISPOSITION PLAN, CHART, PRESERVATION NOTES & DETAILS

MICHAEL CONNER, R.L.A.
STATE OF FLORIDA REGISTERED LANDSCAPE ARCHITECT
LICENSE No.1181

DATE JANUARY 17, 2012

SCALE 1:20
PROJECT No 11-4216
PURPOSE OF THIS SET DRC
SHEET **LE-100**

PLANTING NOTES:

GENERAL:

1. STATE LAW MANDATES CONTACTING "SUNSHINE STATE ONE-CALL OF FLORIDA, INC." AT 811 OR 1-800-432-4770, AT LEAST 48 HOURS PRIOR TO COMMENCEMENT OF CONSTRUCTION.
2. LANDSCAPE CONTRACTOR SHALL CONTACT THE COUNTY, CITY AND/OR UTILITY COMPANIES TO LOCATE ALL UNDERGROUND UTILITIES OR STRUCTURES PRIOR TO DIGGING. LANDSCAPE CONTRACTOR SHALL REPAIR ALL DAMAGE TO UNDERGROUND UTILITIES, AND/OR CONSTRUCTION CAUSED BY UTILITY DAMAGE, AT NO COST TO THE OWNER.
3. CONTRACTOR SHALL FURNISH A "UNIT PRICE BREAKDOWN" FOR ALL MATERIAL TO BE USED IN PROJECT:
   - 3.1. MULCH, TOPSOIL, FERTILIZER, STAKING, ETC. SHALL BE INCLUDED IN THE "UNIT BREAKDOWN" COST PER PLANT.
   - 3.2. REQUESTS FOR SUBSTITUTIONS AND CHANGES SHALL BE IN WRITING BY LANDSCAPE ARCHITECT PRIOR TO INSTALLATION.
   - 3.3. OWNER'S REPRESENTATIVE MAY IN HIS/HER DISCRETION ADD OR DELETE UNINSTALLED PLANT MATERIAL FROM PROJECT UTILIZING THE "UNIT BREAKDOWN" UNIT COSTS SUBMITTED.
4. CONTRACTOR(S) MUST OBTAIN SEPARATE LANDSCAPE, IRRIGATION & TREE RELOCATION/REMOVAL PERMITS FROM THE GOVERNING AGENCIES PRIOR TO THE ISSUANCE OF THE FIRST BUILDING PERMIT FOR THE PROJECT.
5. LANDSCAPE CONTRACTOR MUST CALL THE LANDSCAPE INSPECTOR WITH THE GOVERNING AGENCY TO SCHEDULE A PRE CONSTRUCTION MEETING, ALONG WITH THE OWNER'S REPRESENTATIVE AND LANDSCAPE ARCHITECT PRIOR TO ANY SITE PREPARATION.
6. XERISCAPE LANDSCAPE PRINCIPLES SHALL BE APPLIED TO ALL SITES AS SPECIFIED IN THE SOUTH FLORIDA WATER MANAGEMENT DISTRICTS "WATERWISE SOUTH FLORIDA LANDSCAPES" GUIDELINES.
7. LANDSCAPE CONTRACTOR SHALL NOTIFY LANDSCAPE ARCHITECT & GOVERNING AGENCIES OF ANY CHANGES IN MATERIAL FOR APPROVAL, PRIOR TO INSTALLATION.
8. LANDSCAPE CONTRACTOR SHALL REFER TO LANDSCAPE DETAILS FOR ADDITIONAL PLANTING REQUIREMENTS.
9. LANDSCAPE CONTRACTOR SHALL VERIFY ALL ESTIMATED QUANTITIES OF MATERIAL SHOWN ON THE DRAWINGS PRIOR TO SUBMITTING HIS BID. PLANTING PLAN IS TO TAKE PRECEDENCE OVER PLANT LIST/SCHEDULE.
10. ALL PLANT MATERIAL SHALL BE GUARANTEED FOR A PERIOD OF NOT LESS THAN 12 MONTHS AFTER DATE OF FINAL ACCEPTANCE (SEE WATERING NOTE).
11. THE LANDSCAPE ARCHITECT OF RECORD SHALL PROVIDE A CERTIFICATION LETTER TO THE GOVERNING AGENCY CERTIFYING THAT THE LANDSCAPING WAS INSTALLED ACCORDING TO THE PLAN(S) AND SPECIFICATION(S) BEFORE THE LANDSCAPE INSPECTOR MAKES THE FINAL INSPECTION FOR ALL NON-RESIDENTIAL AND PLANNED COMMUNITY RESIDENTIAL PROJECTS.
12. OWNER(S) OF THE LAND OR THEIR AGENTS SHALL BE RESPONSIBLE FOR THE MAINTENANCE OF ALL LANDSCAPE, AFTER INSTALLATION.

SITE PREPARATION:

13. LANDSCAPE CONTRACTOR SHALL EXERCISE CAUTION TO PROTECT ALL EXISTING SOD AND IRRIGATION SYSTEMS ANY DAMAGE TO THE SOD OR IRRIGATION SHALL BE REPLACED/REPAIRED TO THE ORIGINAL STATE BY THE LANDSCAPE CONTRACTOR AT NO COST TO THE OWNER.
14. GENERAL CONTRACTOR TO REMOVE ALL EXISTING BRAZILIAN PEPPER, FLORIDA HOLLY AND ALL EXOTIC NUISANCE MATERIAL ON SITE, AS REQUIRED AND/OR AS SPECIFIED ON EXISTING PRESERVATION/DISPOSITION PLANS.
15. GENERAL CONTRACTOR SHALL ERADICATE & REMOVE ALL WEEDS & GRASS, CLEAN-UP ANY DEAD MATERIAL, DEBRIS, AND RUBBISH PRIOR TO INSTALLING A NEW PLANT MATERIAL.
16. LANDSCAPE CONTRACTOR IS RESPONSIBLE FOR ALL FINAL GRADING WITHIN PLANTING AREAS.

PLANTING/TOP SOIL:

17. ALL BUILDING CONSTRUCTION MATERIAL AND FOREIGN MATERIAL SHALL BE REMOVED FROM THE PLANTING AREAS AND REPLACED WITH 50/50 MIX FILL SOIL OR AS OTHERWISE SPECIFIED.
   - 17.1. ALL PARKING ISLANDS AND PLANTING BEDS AROUND BUILDINGS, SHALL BE EXCAVATED TO A DEPTH OF 36" MIN. AND REPLACED WITH 50/50 PLANT MIX, OR AS PER SPECIFICATIONS.
   - 17.2. TOPSOIL SHALL BE CLEAN AND FREE OF CONSTRUCTION DEBRIS, WEEDS, ROCKS, NOXIOUS PESTS AND DISEASES, AND EXHIBIT A PH OF 6.5 TO 7.0. THE TOPSOIL FOR PLANTING AREAS SHALL BE AMENDED WITH HORTICULTURAL ACCEPTABLE ORGANIC MATERIAL. ALL SOILS USED SHALL BE SUITABLE FOR THE INTENDED PLANT MATERIAL. THE SOURCE OF THE TOPSOIL SHALL BE KNOWN TO THE APPLICANT AND MUST BE ACCEPTABLE TO THE GOVERNING AGENCIES.
   - 17.3. LANDSCAPE CONTRACTOR TO SUPPLY & INSTALL 2" SOIL LAYER 50/50 MIX BLANKET FOR ALL NEW SOD AREAS.
   - 17.4. THE MIN. PLANTING SOIL DEPTH SHALL BE SIX (6") INCHES FOR GROUND COVERS, FLOWERS, SHRUBS AND HEDGES.
   - 17.5. TREES SHALL RECEIVE TWELVE (12") INCHES OF PLANTING SOIL AROUND THE ROOT BALL.
   - 17.5. 6" TOP SOIL REQUIRED AROUND & BENEATH ALL PROPOSED PLANT MATERIAL ROOT BALLS. (UNLESS OTHERWISE NOTED)
   - 17.6. CLEAN SAND SHALL BE USED TO BACKFILL ARID CLIMATE PALMS.
   - 17.7. NATIVE TOPSOIL ON THE SITE SHALL BE RETAINED ON-SITE AND USED WHEN THERE IS SUFFICIENT QUANTITY TO COVER AT LEAST SOME OF THE ON-SITE LANDSCAPED AREAS.

PLANT MATERIAL:

18. ALL PLANT MATERIAL SHALL BE MIN. GRADE OF FLORIDA NO. 1 & BE INSTALLED AS SPECIFIED IN "FLORIDA DEPT. OF AGRICULTURAL GRADES AND STANDARDS", CURRENT EDITION RESPECTIVELY.
19. LANDSCAPE CONTRACTOR IS RESPONSIBLE FOR ATTAINING PERMITS PRIOR TO INSTALLATION OF NEW PLANT MATERIAL.
20. ALL GUYING, STAKING & TREE BRACES SHALL BE THE RESPONSIBILITY OF THE LANDSCAPE CONTRACTOR. REFER TO PLANTING DETAILS FOR APPROVED METHODS. LANDSCAPE CONTRACTOR SHALL RETURN 12 MONTHS AFTER COMPLETION OF JOB AND REMOVE ALL GUYS, STAKES & TREE BRACES.
21. ALL PLANT MATERIAL SYMBOLS SHOWN ON LANDSCAPE PLAN(S) SHALL BE CONSIDERED DIAGRAMMATIC AND SHOULD BE ADJUSTED IN THE FIELD BY CONTRACTOR TO AVOID UTILITY CONFLICTS AND OTHER OBSTRUCTIONS. WHERE SAID ADJUSTMENT CANNOT BE DONE WITHOUT SIGNIFICANT CHANGE TO THE PLANTING DESIGN CONTRACTOR SHALL CONTACT THE LANDSCAPE ARCHITECT AND/OR OWNER'S REPRESENTATIVE FOR APPROVAL, PRIOR TO INSTALLATION.
   - 21.1. TREES SHALL BE PLACED A MINIMUM OF 6 FT. FROM UNDERGROUND UTILITIES AND ALL SHADE TREES INSTALLED WITHIN SIX FEET OF PUBLIC/PRIVATE INFRASTRUCTURE (INCLUDING CURBS, WALKS, PAVEMENT, ETC.) SHALL UTILIZE A ROOT BARRIER SYSTEM, AS APPROVED BY THE GOVERNING AGENCY.
   - 21.2. ALL PLANT MATERIAL SHALL BE CLEAR (7-1/2 FT. IN FRONT & SIDES WITH 4 FT. IN REAR) AROUND ALL FIRE HYDRANTS, CHECK VALVES, FIRE DEPT. EQUIPMENT, ETC., OR AS REQUIRED.
   - 21.3. SHADE TREES SHALL BE PLANTED MIN. OF 15 FT. FROM LIGHT POLES. ALL SMALL TREES AND PALMS TO BE PLANTED MIN. OF 7.5 FT. FROM LIGHT POLES, OR AS OTHERWISE SPECIFIED.
   - 21.4. ALL SHADE TREES SHALL HAVE A 4 1/2" MIN. CLEAR TRUNK HEIGHT (UNLESS OTHERWISE SPECIFIED) AND CALIPER SHALL BE MEASURED AT D.B.H. AT TIME OF PLANTING.
   - 21.5. NO TREES OR OTHER PLANT MATERIAL MAY BE PLANTED IN RIGHTS-OF-WAY (IE. SWALE AREAS) WITHOUT A PERMIT. NO SHRUB SPECIES WITH A MATURE HEIGHT THAT WILL BLOCK THE CLEAR SIGHT ZONE FROM 30 INCHES IN HEIGHT TO SIX FEET IN HEIGHT WILL BE APPROVED IN SAID SWALE AREAS.
   - 21.6. ALL DUMPSTERS, TRANSFORMERS, UTILITY BOXES, IRRIGATION PUMP HOUSES & MECHANICAL EQUIPMENT, INCLUDING BACK FLOW PREVENTOR, A.C. UNITS, ETC., SHALL BE SCREENED WITH HEDGE MATERIAL TO THE HEIGHT OF EACH ABOVE GROUND ELEMENT FOR COMPLETE SCREENING ON THREE (3) SIDES MIN.
     - 21.6.1. THE QUANTITY OF SCREENING SHRUBS IS IN ADDITION TO THE REQUIRED NUMBER OF SHRUBS AS PROVIDED IN THE CODE CALCULATION TABLE.
     - 21.6.2. ALL SCREENING SHRUBS SHALL BE PLANTED IN SUCH A WAY AS TO PROVIDE ACCESS FOR PROPER OPERATION OF EQUIPMENT BEING SCREENED AND/OR PER THE REQUIREMENTS OF THE UTILITY AS NECESSARY.
     - 21.6.3. ALL HEDGE MATERIAL REQUIRED FOR SCREENING PURPOSES SHALL BE PLANTED SO AS TO BE TIP TO TIP WITHIN SIX MONTHS OF PLANTING AND MAINTAINED SO AS TO FORM A CONTINUOUS VISUAL SCREEN. ADJUST SPACING AS NECESSARY AND/OR PROVIDE ADDITIONAL PLANTS TO PROVIDE AN ADEQUATE SCREEN.
     - 21.6.4. SHRUBS USED AS HEDGES SHALL BE FL NO. 1 OR BETTER WITH A MIN. HT. OF 24" AND A MIN. SPREAD. OF 18", WHEN MEASURED IMMEDIATELY AFTER PLANTING & SHALL BE A MIN. OF 3' HT. WITHIN 2 YRS. FROM THE DATE OF PLANTING.
22. ALL SIZES SHOWN FOR PLANT MATERIAL ON THE PLAN ARE TO BE CONSIDERED MINIMUM. ALL PLANT MATERIAL MUST MEET OR EXCEED THESE MINIMUM REQUIREMENTS FOR BOTH HEIGHT AND SPREAD. ANY OTHER REQUIREMENTS FOR SPECIFIC SHAPE OR EFFECT AS NOTED ON THE PLAN SHALL ALSO BE REQUIRED FOR ACCEPTANCE. ALL TREES ARE TO BE SINGLE TRUNK UNLESS OTHERWISE NOTED ON THE PLANS.
23. ALL SYNTHETIC BURLAP, SYNTHETIC STRING OR CORDS, OR WIRE BASKETS SHALL BE REMOVED BEFORE ANY TREES ARE PLANTED. ALL SYNTHETIC TAPE (I.E. TAGGING TAPE, NURSERY TAPE) SHALL BE REMOVED FROM TRUNKS, BRANCHES, ETC. BEFORE INSPECTION. THE TOP 1/3 OF ANY NATURAL BURLAP SHALL BE REMOVED OR TUCKED INTO THE PLANTING HOLE BEFORE THE TREES ARE BACK FILLED
24. SET TREES NO DEEPER THAN IT WAS IN ITS ORIGINAL GROWING WITH THE ROOT BALLS EVEN WITH, OR SLIGHTLY HIGHER (+/- 1") THAN THE FINISHED GRADE.
25. ALL "GROUNDCOVER REQUIRES 75% COVERAGE AND 100% WITHIN 3 MONTHS OF INSTALLATION".
26. PROPOSED UNDERSTORY PLANT MATERIAL SHALL NOT BE PLANTED ON TOP OF TREE OR PALM ROOT BALLS.
27. ALL PLANT MATERIAL SHALL BE FERTILIZED UPON INSTALLATION, SEE SPECIFICATIONS.

MULCH:

28. A THREE (3") INCH MIN. DEPTH OF APPROVED ORGANIC MULCH MATERIAL (MEASURED AT THE TIME OF FINAL INSPECTION) SHALL BE INSTALLED IN ALL LANDSCAPED AREAS NOT COVERED BY PAVEMENT, SOD, DECORATIVE STONES, OR ANNUAL FLOWER BEDS. ADDITIONALLY, EACH TREE SHALL HAVE A RING OF ORGANIC MULCH AT THE PERIMETER OF THE ROOT BALL:
   - 28.1. THE USE OF CYPRESS MULCH IS PROHIBITED, AS WELL AS ANY MULCH CONTAINING ARSENIC.
   - 28.2. A MIN. MULCH WIDTH OF 18" BEYOND THE TRUNK OF ALL TREES, PALMS, HEDGES AND SHRUBS.
   - 28.3. MULCH SHALL NOT BE PLACED CLOSER THAN 3" FROM THE TRUNK OF ALL TREES AND PALMS; THE MOUNDING OF MULCH IS NOT ACCEPTABLE.
   - 28.4. MULCH SHALL BE USED IN CONJUNCTION WITH GROUND COVER IN ALL PLANTING BEDS (UNLESS SPECIFIED OTHERWISE).
   - 28.5. DO NOT MULCH WITHIN DESIGNATED "PRESERVE AREAS" (UNLESS SPECIFIED OTHERWISE).

LANDSCAPE/LAWN AREAS:

29. LANDSCAPE MATERIAL SHALL BE PLACED ON ALL AREAS NOT COVERED BY MAIN AND ACCESSORY STRUCTURES, WALKS AND VEHICULAR USE AREAS. LANDSCAPE MATERIAL SHALL EXTEND TO ANY ABUTTING STREET, PAVEMENT EDGE AND TO THE MEAN WATER LINE OF ANY ABUTTING CANAL, LAKE OR WATERWAY.
   - 29.1. ALL AREAS DISTURBED DURING CONSTRUCTION SHALL BE SODDED WITH ST. AUGUSTINE 'FLORATAM', UNLESS OTHERWISE NOTED.
   - 29.2. CONTRACTOR SHALL INCLUDE IN HIS BID ST. AUGUSTINE 'FLORATAM' SOD FOR ALL LANDSCAPE AREAS VOID OF ANY PLANT MATERIAL (ie. GROUND COVER, SHRUBS, SOD), NOT SPECIFIED IN PLANS, WITHIN THE LIMITS OF THE PROJECT. CONTRACTOR SHALL CONTACT LANDSCAPE ARCHITECT PRIOR TO BIDDING IN REFERENCE TO "PROJECT LIMITS".

IRRIGATION:

30. LANDSCAPE CONTRACTOR TO PROVIDE AN AUTOMATIC LAWN IRRIGATION SYSTEM GUARANTEEING 100% COVERAGE & MAINTAIN A 50% MIN. OVERLAP TO ALL LANDSCAPED AREAS. THERE SHALL BE NO OVER SPRAY ONTO SIDEWALKS. IRRIGATION SYSTEM SHALL:
   - 30.1. HAVE A RAIN SENSOR DEVICE INSTALLED, AS REQUIRED.
   - 30.2. MUST USE PURPLE CODED PIPE, HEADS, VALVES ETC. FOR IDENTIFYING RECLAIM WATER COMPONENTS (FOR FUTURE). IRRIGATION PLAN SHALL BE PROVIDED PRIOR TO BUILDING PERMIT.

WATERING NOTE:

31. ALL NEW PLANT MATERIAL SHALL HAVE AN ESTABLISHMENT PERIOD OF 12 MONTHS FROM THE TIME OF FINAL ACCEPTANCE. DURING THE ESTABLISHMENT PERIOD THE CONTRACTOR WILL BE RESPONSIBLE FOR THE FOLLOWING ITEMS: WATERING PER THE SCHEDULE ATTACHED(#23), RE-SETTING OF PLANTS, REPLACEMENT OF SICK OR DEAD PLANTS, ALL OTHER CARE REQUIRED FOR PROPER GROWTH. ANY PLANT MATERIAL NOT IN HEALTHY GROWING CONDITION SHALL BE REPLACED BY THE CONTRACTOR AT NO ADDITIONAL COST TO THE CLIENT.
   - 31.1. THE 12 MONTH WARRANTEE/ESTABLISHMENT PERIOD SHALL BE EXTENDED BY 45 DAYS FOR ALL REPLACEMENT PLANT MATERIAL.
   - 31.2. AT THE CLIENTS EXPENSE, THE CONTRACTOR WILL REPLACE ANY PLANT MATERIAL DAMAGED AS A RESULT OF AUTOMOBILE ACCIDENTS OR "ACTS OF GOD" LIMITED TO HAIL, FREEZE, LIGHTNING, AND WINDS EXCEEDING 75 MPH AS DEFINED BY THE MIAMI HURRICANE CENTER.
32. WATERING CONTRACT SHALL BE INCLUDED IN CONTRACTOR'S BID FOR ANY PLANT MATERIAL THAT HAS BEEN ROOT PRUNED, INSTALLED, DISTURBED BY CONSTRUCTION, OR WHERE PROPOSED OR EXISTING IRRIGATION SYSTEMS ARE NOT FUNCTIONAL. ALL WARRANTIES SHALL BE IN PLACE BY CONTRACTOR REGARDLESS OF NON-OPERATIONAL IRRIGATION SYSTEMS OR AREAS WHERE NO IRRIGATION IS PROPOSED.
33. WATERING SCHEDULE (FIRST 6 MONTHS)*:

WEEK(S)	FREQUENCY (WATERING DAYS)
1 THRU 6	MON., WED., FRI., SAT.
7 THRU 12	MON., WED., FRI.
13 THRU 24	MON., FRI.

*6 MONTH WATERING SCHEDULE IS A MINIMUM, CONTRACTOR IS RESPONSIBLE FOR WATERING PLANT MATERIAL FOR THE FULL 12 MONTH ESTABLISHMENT/WARRANTY PERIOD.

PRELIMINARY PLAN NOTE:

THIS PRELIMINARY PLAN/SKETCH IS FOR ILLUSTRATIVE PURPOSES IN ORDER TO CONVEY A DESIGN INTENT, IT IS **NOT FOR CONSTRUCTION**, AND HAS NOT BEEN FULLY REVIEWED, ENGINEERED OR CALCULATED. IT MAY REQUIRE ADDITIONAL CHANGES TO ACCOMMODATE PROPER GRADING & DRAINAGE, TRAFFIC CONDITIONS, A.D.A. REQUIREMENTS, ARCHITECTURAL AND/OR LANDSCAPE DETAILS, UTILITY COORDINATION, AND/OR OTHER POSSIBLE EXISTING CONDITIONS NOT YET SURVEYED.

CALL 48 HOURS BEFORE YOU DIG IN FLORIDA
IT'S THE LAW!
811 or
1-800-432-4770
SUNSHINE STATE ONE CALL OF FLORIDA, INC.

OVERALL PLANT LIST

TREES:

NATIVE & DROUGHT TOLERANT	QTY	SYMBOL	BOTANICAL NAME	COMMON NAME	SPECIFICATIONS
	(*)3	BAV	Bulnesia arborea	Verawood Tree	Field Grown, 15' Ht. X 5' SPRD., 30" C.T., 2" DBH.
YES	(*)28	CEG	Conocarpus erectus	Green Buttonwood	Field Grown, 15' Ht. X 6' SPRD., 4' C.T., 2" DBH.
	(*)6	FDJ	Filicium decipiens	Japanese Fern Tree	Field Grown, 15' Ht. X 5' SPRD., 30" C.T., 2" DBH.
	14	LJW	Ligustrum japonicum	Wax Privet	Field Grown, full, Multi-trunk, 10' Ht.x 8' Spread.
YES	(*)14	MGD	Magnolia grandiflora 'DD Blanchard'	DD Blanchard Magnolia	Field Grown, 15' Ht. X 5' SPRD., 4' C.T., 2" DBH.
YES	(*)3	QVI	Quercus virginiana	Live Oak	Field Grown, 15' Ht. X 6' SPRD., 4' C.T., 2" DBH.
YES	(*)2	SMT	Swietenia mahogani	Mahogany Tree	Field Grown, 15' Ht. X 6' SPRD., 4' C.T., 2" DBH
	56	PROVIDED			

PALMS:

NATIVE & DROUGHT TOLERANT	QTY	SYMBOL	BOTANICAL NAME	COMMON NAME	SPECIFICATIONS
	(*,**)20	CAR	Carpentaria acuminata	Carpentana Palm	Field grown, 18'-26' Ht., 6'-10' wood min., standard heights
	3	CCP	Chamaedorea cataractarum	Cat Palm	Field grown, 4'-5'Ht.x 3' spread
	10	CFH	Chamardorea 'Florida Hybrid'	Parlor Palm / Bamboo Palm	Full, 7 Gal., 5'-6' O.A. Ht., Shade Grown
	(*,**)25	PES	Ptyschosperma elegans	Alexander Palms (single)	Field grown, 15'-20' Ht., 6'-12' wood minimum, single trunk, staggered heights
	(*,**)6	PET	Ptyschosperma elegans	Alexander Palms (triple)	Field grown, 15' Ht., 6' wood minimum, triple trunk
	(*)4	PHM	Phoenix dactylifera 'Medjool'	Medjool Date Palm	Field grown, 24' O.A. Ht., 10' C.T. Min., Florida Fancy guaranteed for one year by grower
	3	PRT	Phoenix roebellini	Pygmy Date Palm (triple)	Field grown, 6' Ht., Triple
YES	(*)34	REI	Roystonea elata	Florida Royal Palm	Field grown, 35' O.A. Ht, 20' G.W. Min., Florida Fancy, matched
	8	RHE	Rhapsis excelsa	Lady Palm	Full, 10 Gal., 5' height, specimen
	55	PROVIDED			

PLEASE NOTE:
(*) DEPICTS TREES / PALMS THAT REPRESENT LANDSCAPE REQUIREMENTS TABLE
(**) DEPICTS PALMS THAT ARE COUNTED AS 3 TO 1 FOR THE LANDSCAPE REQUIREMENTS TABLE

SHRUBS & GROUNDCOVERS:

NATIVE & DROUGHT TOLERANT	QTY	SYMBOL	BOTANICAL NAME	COMMON NAME	SPECIFICATIONS
	9	ABO	Aechmea blanchetiana 'Orange'	Large Orange Bromeliad	Full, 3 Gal., 2' X 2', 30" O.C.
	296	ADF	Aspidistra elatior	Cast Iron Plant	Full, 3 Gal., 18" X 18", 24" O.C.
	241	ANN	Annuals	Annuals	4" Pots, 12" O.C., Variety To Be Selected By L.A
	44	AZD	Alpinia zerumbet ' Variegata Dwarf'	Dwarf Variegated Ginger	Full, 3 Gal., 30" X 30" Min. Ht., 36" O.C.
	78	CAQ	Crinum augustum 'Queen Emma'	Queen Emma' Crinum	Full, 3 Gal., 30" X 30" Min. Ht., 36" O.C.
YES	132	CES	Conocarpus erectus 'Sericus'	Silver Buttonwood	Full, 7 Gal., 36" x 30", 36" O.C.
YES	150	CHI	Chrysobalanus icaco 'Red Tip'	Red Tip Cocoplum	Full, 3 Gal., 2' X 2', 2' O.C.
	218	CVP	Codiaeum variegatum 'Petra'	Petra Croton	Full, 3 Gal., 2' x 2', 30" O.C.
	18	CVM	Codiaeum variegatum 'Mammey'	Mammey Croton	Full, 3 Gal., 2' x 2', 2' O.C.
	420	DIT	Dianella tasmanica	Blueberry Flax Lily	Full, 3 Gal., 18" X 18", 24" O.C.
	132	FMG	Ficus microcarpa 'Green Island'	Green Island Ficus	Full, 3 Gal., 18" X 18", 24" O.C.
	265	ING	Ixora 'Nora Grant'	Nora Grant Ixora	Full, 3 Gal., 2' X 2', 2' O.C.
	344	LVV	Liriope muscari Variegata	Variegated liriope	Full, 1 Gal., 5-7 PPP, 15"X 15", 18" O.C.
	379	JSV	Jasminum volubile	Wax Jasmine	Full, 3 Gal., 2' X 2', 2' O.C.
YES	71	MYR	Myrcianthes fragrans	Simpson Stopper	Full, 7 Gal. 4'-5' Ht. x 30" SPRD., 3' O.C.
	225	NEF	Nephrolepis biserrata furcans	Fishtail Fern	Full 3 Gal, 18" x 18", 24" O.C.
	175	PIB	Plumbago 'Imperial Blue'	Imperial Blue Plumbago	Full, 3 Gal., 2' X 2', 2' O.C.
	382	SAT	Schefflera arboricola 'Trinette'	Schefflera	Full, 3 Gal., 2' X2', 2' O.C.
YES	105	TDF	Tripsacum dactyloides 'dwarf'	Dwarf Fakahatchee Grass	Full, 3 Gal., 2' X 2', 30" O.C.
	164	TLV	Thunbergia laurifolia	Blue Sky Vine	Full, 7 Gal., Attached to Greenscreen, 2' O.C.
	58	TJT	Trachelospermum jasminodes	Confederate Jasmine	Full, 7 Gal., Attached to Greenscreen, 2' O.C.
	77	VSS	Viburnum suspensum	Sandankwa Viburnum	Full, 3 Gal. 2'x2' Sprd., Full to Base, 30" O.C.
	AS NEEDED	SOD	St. Augustine 'floratam'		

LANDSCAPE REQUIREMENTS

Minimum landscape area:
Min. 15% of Site Area: 73,083 sq. ft. x .15 = 10,962 sq. ft. required/ 15,294.22 sq. ft. provided (20.9%)

Required trees:
1.68 Acres = 73,083 sq. ft../ 1,500 = 48.72 trees required/ 111 trees provided

Maximum 50% palms:
111 x .50 = 55.5 palms maximum/ 55 provided

Minimum 50% Native Trees / Palms Required:
111 x .50 = 55.5 required / 81 provided

Minimum of Five (5) Tree Species Required:
Six (6) species provided

Required Royal Palms along Hallandale Beach Blvd.: 1 Royal Palm per 25' ft
480' ft/ 25' = 19.2 required Royal Palms/ 20 provided

Perimeter buffers for V.V.A. minimum widths:

North - front property line (along Hallandale Beach Blvd.) – 10'ft required/ 10' ft provided * (parking garage & building)

West - side property line (Along S.E. 26th Ave.) - 5'ft required/ 10'ft provided (parking garage)

South - rear/side property line – 5'ft required/ 4'4" provided (driveway) / 34'ft provided (parking garage)

East - Intracoastal Waterway – 0'ft required/ 0'ft provided (pool deck & dock)

(Please note: * exception at entrance drive/ drop-off circle)

All landscape buffers:
Continuous hedge @ minimum 24" in. height (touching, or maximum 24" in. O.C.) at installation required/ this has been provided within all landscape buffers

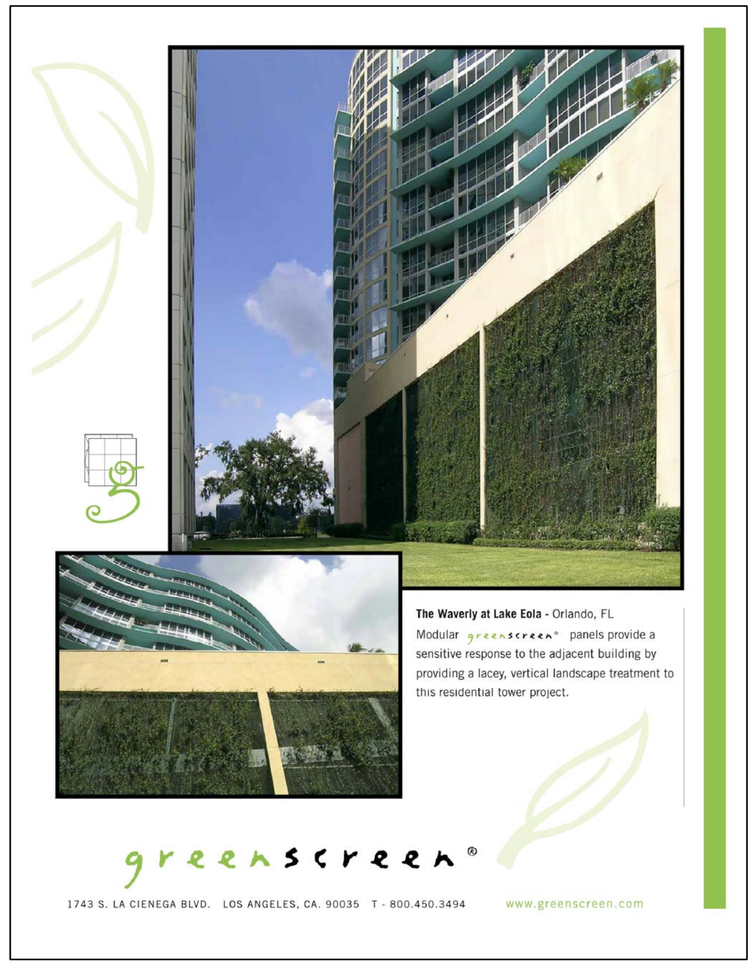

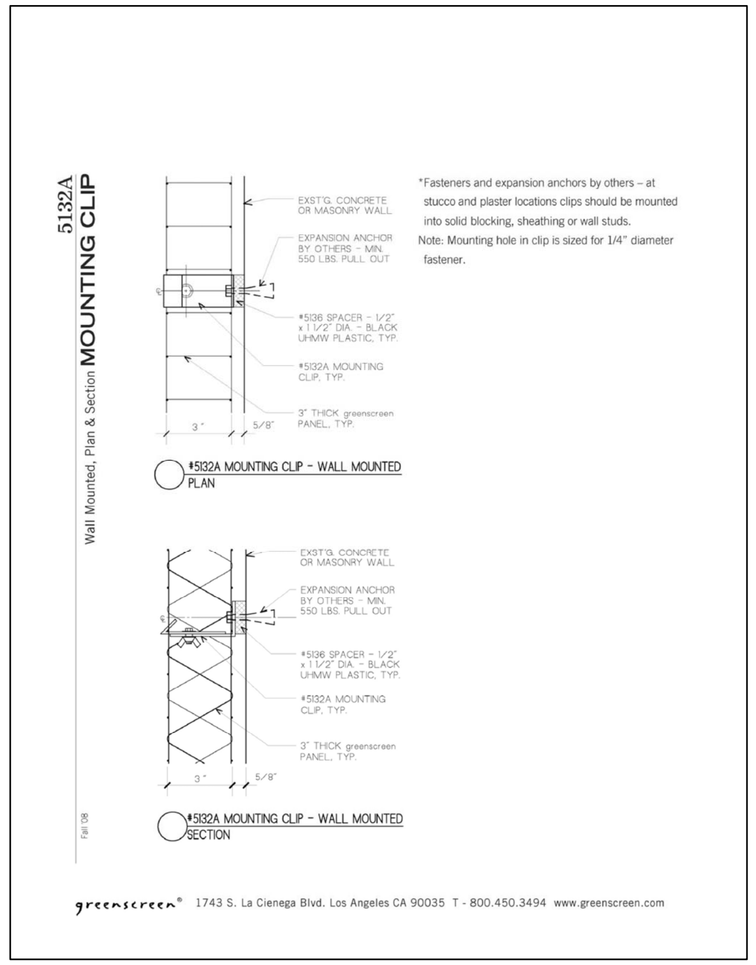

NO	DATE	REVISION	BY
1	9/22/11	REVISED PER DRC COMMENTS	EMS
2	10/20/11	REVISED PER DRC COMMENTS	EMS
3	01/17/12	REVISED PER PROPERTY LINE CHANGE	EMS

DESIGNED EMS DATE 6/29/11
CHECKED MC DATE ----
ISSUED FOR ---- DATE ----

Calvin, Giordano & Associates, Inc.
EXCEPTIONAL SOLUTIONS
1800 Eller Drive, Suite 600, Fort Lauderdale, Florida 33316
Phone: 954.921.7781 Fax: 954.921.8807
Certificate of Authorization LC00000339

BEACHWALK
2600 EAST HALLANDALE BEACH BOULEVARD
HALLANDALE BEACH, FLORIDA
SITE PLAN APPROVAL SET - NOT FOR CONSTRUCTION

LANDSCAPE NOTES & PLANT LIST

MICHAEL CONNER, R.L.A.
STATE OF FLORIDA REGISTERED LANDSCAPE ARCHITECT
LICENSE No.1181

DATE OCTOBER 20, 2011

SCALE 1:20
PROJECT No 11-4216
PURPOSE OF THIS SET DRC
SHEET **L-010**

File Name: P:\Projects\2011\114216 Related Group - Monero Site Plan\CADD Files\Drawings\11-4216-L-100-PLNT.dwg - (Plotted by: Erin Sudman on Monday, January 16, 2012 5:18:09 PM)

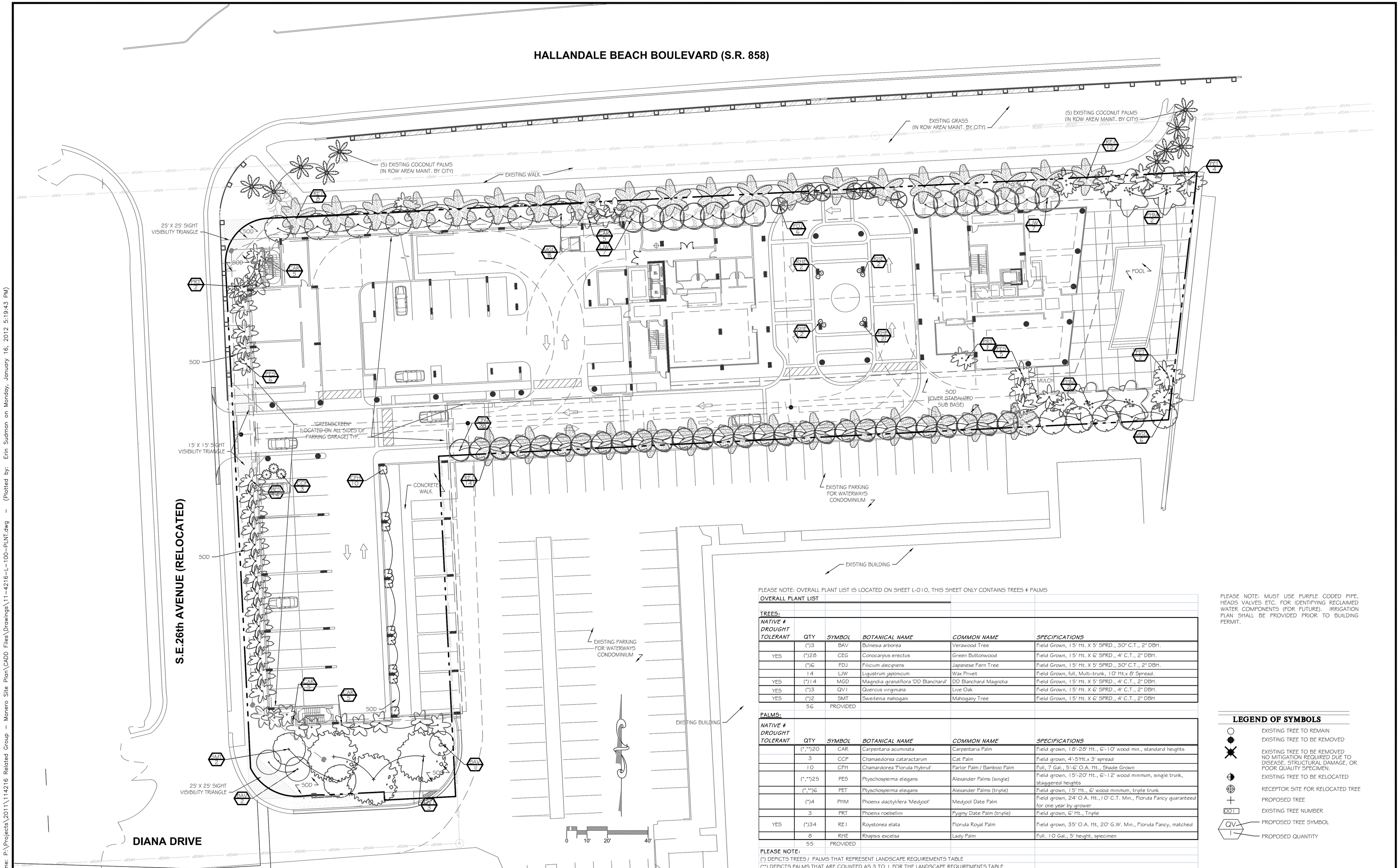

PLEASE NOTE: OVERALL PLANT LIST IS LOCATED ON SHEET L-010, THIS SHEET ONLY CONTAINS TREES & PALMS

OVERALL PLANT LIST

TREES:

NATIVE & DROUGHT TOLERANT	QTY	SYMBOL	BOTANICAL NAME	COMMON NAME	SPECIFICATIONS
	(*)3	BAV	Bulnesia arborea	Verawood Tree	Field Grown, 15' Ht. X 5' SPRD., 30" C.T., 2" DBH.
YES	(*)28	CEG	Conocarpus erectus	Green Buttonwood	Field Grown, 15' Ht. X 6' SPRD., 4" C.T., 2" DBH.
	(*)6	FDJ	Filicium decipiens	Japanese Fern Tree	Field Grown, 15' Ht. X 5' SPRD., 30" C.T., 2" DBH.
	14	LJW	Ligustrum japonicum	Wax Privet	Field Grown, full, Multi-trunk, 10' Ht.x 8' Spread.
YES	(*)14	MGD	Magnolia grandiflora 'DD Blanchard'	DD Blanchard Magnolia	Field Grown, 15' Ht. X 5' SPRD., 4" C.T., 2" DBH.
YES	(*)3	QVI	Quercus virginiana	Live Oak	Field Grown, 15' Ht. X 6' SPRD., 4" C.T., 2" DBH.
YES	(*)2	SMT	Swietenia mahogani	Mahogany Tree	Field Grown, 15' Ht. X 6' SPRD., 4" C.T., 2" DBH
	56	PROVIDED			

PALMS:

NATIVE & DROUGHT TOLERANT	QTY	SYMBOL	BOTANICAL NAME	COMMON NAME	SPECIFICATIONS
	(*,**)20	CAR	Carpentaria acuminata	Carpentaria Palm	Field grown, 18'-28' Ht., 6'-10' wood min., standard heights
	3	CCP	Chamaedorea cataractarum	Cat Palm	Field grown, 4'-5'Ht.x 3' spread
	10	CFH	Chamardorea 'Florida Hybrid'	Parlor Palm / Bamboo Palm	Full, 7 Gal., 5'-6' O.A. Ht., Shade Grown
	(*,**)25	PES	Ptyschosperma elegans	Alexander Palms (single)	Field grown, 15'-20' Ht., 6'-12' wood minimum, single trunk, staggered heights
	(*,**)6	PET	Ptyschosperma elegans	Alexander Palms (triple)	Field grown, 15' Ht., 6" wood minimum, triple trunk
	(*)4	PHM	Phoenix dactylifera 'Medjool'	Medjool Date Palm	Field grown, 24' O.A. Ht., 10' C.T. Min., Florida Fancy guaranteed for one year by grower
	3	PRT	Phoenix roebellini	Pygmy Date Palm (triple)	Field grown, 6' Ht., Triple
YES	(*)34	REI	Roystonea elata	Florida Royal Palm	Field grown, 35' O.A. Ht, 20' G.W. Min., Florida Fancy, matched
	8	RHE	Rhapsis excelsa	Lady Palm	Full, 10 Gal., 5' height, specimen
	55	PROVIDED			

PLEASE NOTE:
(*) DEPICTS TREES / PALMS THAT REPRESENT LANDSCAPE REQUIREMENTS TABLE
(**) DEPICTS PALMS THAT ARE COUNTED AS 3 TO 1 FOR THE LANDSCAPE REQUIREMENTS TABLE

PLEASE NOTE: MUST USE PURPLE CODED PIPE, HEADS VALVES ETC. FOR IDENTIFYING RECLAIMED WATER COMPONENTS (FOR FUTURE). IRRIGATION PLAN SHALL BE PROVIDED PRIOR TO BUILDING PERMIT.

LEGEND OF SYMBOLS

- EXISTING TREE TO REMAIN
- EXISTING TREE TO BE REMOVED
- EXISTING TREE TO BE REMOVED NO MITIGATION REQUIRED DUE TO DISEASE, STRUCTURAL DAMAGE, OR POOR QUALITY SPECIMEN.
- EXISTING TREE TO BE RELOCATED
- RECEPTOR SITE FOR RELOCATED TREE
- PROPOSED TREE
- EXISTING TREE NUMBER
- PROPOSED TREE SYMBOL
- PROPOSED QUANTITY

NO	DATE	REVISION	BY
1	9/22/11	REVISED PER DRC COMMENTS	EMS
2	10/20/11	REVISED PER DRC COMMENTS	EMS
3	01/17/12	REVISED PER PROPERTY LINE CHANGE	EMS

DESIGNED	EMS
DATE	6/29/11
CHECKED	MC
DATE	---
ISSUED FOR	---
DATE	---

Calvin, Giordano & Associates, Inc.
EXCEPTIONAL SOLUTIONS
1800 Eller Drive, Suite 600, Fort Lauderdale, Florida 33316
Phone: 954.921.7781 Fax: 954.921.8807
Certificate of Authorization LC00000339

© Copyright 2011 Calvin, Giordano & Associates, Inc.

BEACHWALK
2600 EAST HALLANDALE BEACH BOULEVARD
HALLANDALE BEACH, FLORIDA
SITE PLAN APPROVAL SET - NOT FOR CONSTRUCTION

PROPOSEDTREE PLANTING PLAN

MICHAEL CONNER, R.L.A.
STATE OF FLORIDA REGISTERED LANDSCAPE ARCHITECT
LICENSE No.1181

DATE OCTOBER 20, 2011

SCALE 1:20
PROJECT No 11-4216
PURPOSE OF THIS SET DRC

SHEET **L-100**

File Name: P:\Projects\2011\114216 Related Group - Manero Site Plan\CADD Files\Drawings\11-4216-L-100-PLNT.dwg - (Plotted by: Erin Sudman on Monday, January 16, 2012 5:19:43 PM)

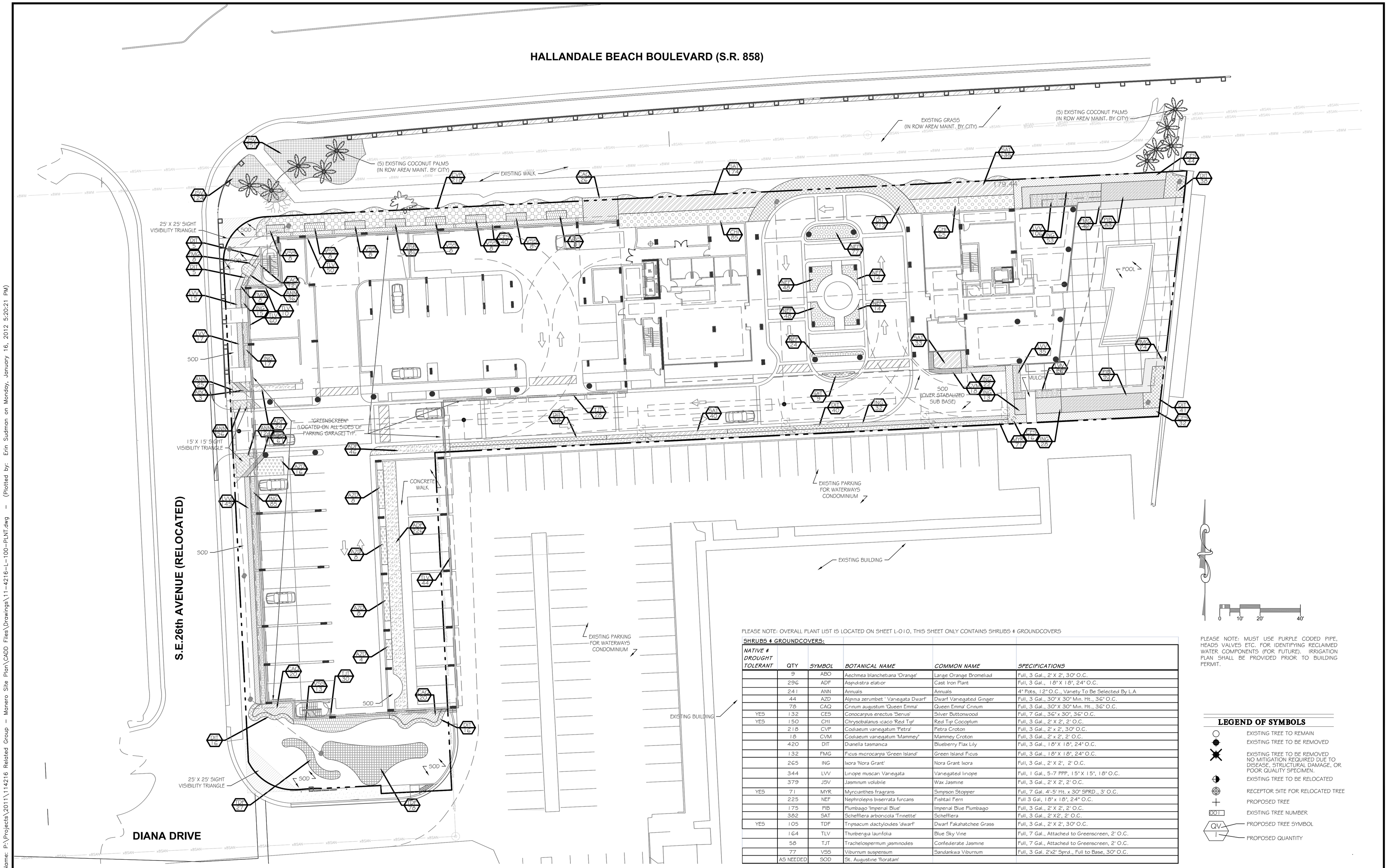

PLEASE NOTE: OVERALL PLANT LIST IS LOCATED ON SHEET L-010, THIS SHEET ONLY CONTAINS SHRUBS & GROUNDCOVERS

SHRUBS & GROUNDCOVERS:

NATIVE & DROUGHT TOLERANT	QTY	SYMBOL	BOTANICAL NAME	COMMON NAME	SPECIFICATIONS
	9	ABO	Aechmea blanchetiana 'Orange'	Large Orange Bromeliad	Full, 3 Gal., 2' X 2', 30" O.C.
	296	ADF	Aspidistra elatior	Cast Iron Plant	Full, 3 Gal., 18" X 18", 24" O.C.
	241	ANN	Annuals	Annuals	4" Pots, 12" O.C., Variety To Be Selected By L.A
	44	AZD	Alpinia zerumbet ' Variegata Dwarf'	Dwarf Variegated Ginger	Full, 3 Gal., 30" X 30" Min. Ht., 36" O.C.
	78	CAQ	Crinum augustum 'Queen Emma'	Queen Emma' Crinum	Full, 3 Gal., 30" X 30" Min. Ht., 36" O.C.
YES	132	CES	Conocarpus erectus 'Sericus'	Silver Buttonwood	Full, 7 Gal., 36" x 30", 36" O.C.
YES	150	CHI	Chrysobalanus icaco 'Red Tip'	Red Tip Cocoplum	Full, 3 Gal., 2' X 2', 2' O.C.
	218	CVP	Codiaeum variegatum 'Petra'	Petra Croton	Full, 3 Gal., 2' x 2', 30" O.C.
	18	CVM	Codiaeum variegatum 'Mammey'	Mammey Croton	Full, 3 Gal., 2' x 2', 2' O.C.
	420	DIT	Dianella tasmanica	Blueberry Flax Lily	Full, 3 Gal., 18" X 18", 24" O.C.
	132	FMG	Ficus microcarpa 'Green Island'	Green Island Ficus	Full, 3 Gal., 18" X 18", 24" O.C.
	265	ING	Ixora 'Nora Grant'	Nora Grant Ixora	Full, 3 Gal., 2' X 2', 2' O.C.
	344	LVV	Liriope muscari Variegata	Variegated liriope	Full, 1 Gal., 5-7 PPP, 15" X 15", 18" O.C.
	379	JSV	Jasminum volubile	Wax Jasmine	Full, 3 Gal., 2' X 2', 2' O.C.
YES	71	MYR	Myrcianthes fragrans	Simpson Stopper	Full, 7 Gal. 4'-5' Ht. x 30" SPRD., 3' O.C.
	225	NEF	Nephrolepis biserrata furcans	Fishtail Fern	Full 3 Gal, 18"x 18", 24" O.C.
	175	PIB	Plumbago 'Imperial Blue'	Imperial Blue Plumbago	Full, 3 Gal., 2' X 2', 2' O.C.
	382	SAT	Schefflera arboricola 'Trinette'	Schefflera	Full, 3 Gal., 2' X2', 2' O.C.
YES	105	TDF	Tripsacum dactyloides 'dwarf'	Dwarf Fakahatchee Grass	Full, 3 Gal., 2' X 2', 30" O.C.
	164	TLV	Thunbergia laurifolia	Blue Sky Vine	Full, 7 Gal., Attached to Greenscreen, 2' O.C.
	58	TJT	Trachelospermum jasminodes	Confederate Jasmine	Full, 7 Gal., Attached to Greenscreen, 2' O.C.
	77	VSS	Viburnum suspensum	Sandankwa Viburnum	Full, 3 Gal. 2'x2' Sprd., Full to Base, 30" O.C.
	AS NEEDED	SOD	St. Augustine 'floratam'		

PLEASE NOTE: MUST USE PURPLE CODED PIPE, HEADS VALVES ETC. FOR IDENTIFYING RECLAIMED WATER COMPONENTS (FOR FUTURE). IRRIGATION PLAN SHALL BE PROVIDED PRIOR TO BUILDING PERMIT.

LEGEND OF SYMBOLS

- EXISTING TREE TO REMAIN
- EXISTING TREE TO BE REMOVED
- EXISTING TREE TO BE REMOVED NO MITIGATION REQUIRED DUE TO DISEASE, STRUCTURAL DAMAGE, OR POOR QUALITY SPECIMEN.
- EXISTING TREE TO BE RELOCATED
- RECEPTOR SITE FOR RELOCATED TREE
- PROPOSED TREE
- 001 EXISTING TREE NUMBER
- QV PROPOSED TREE SYMBOL
- 1 PROPOSED QUANTITY

NO	DATE	REVISION	BY
1	9/22/11	REVISED PER DRC COMMENTS	EMS
2	10/20/11	REVISED PER DRC COMMENTS	EMS
3	01/17/12	REVISED PER PROPERTY LINE CHANGE	EMS

DESIGNED	EMS
DATE	6/29/11
CHECKED	MC
DATE	----
ISSUED FOR	----
DATE	----

Calvin, Giordano & Associates, Inc.
EXCEPTIONAL SOLUTIONS
1800 Eller Drive, Suite 600, Fort Lauderdale, Florida 33316
Phone: 954.921.7781 Fax: 954.921.8807
Certificate of Authorization LC00000339

BEACHWALK
2600 EAST HALLANDALE BEACH BOULEVARD
HALLANDALE BEACH, FLORIDA
SITE PLAN APPROVAL SET - NOT FOR CONSTRUCTION

PROPOSED SHRUB PLANTING PLAN

MICHAEL CONNER, R.L.A.
STATE OF FLORIDA REGISTERED LANDSCAPE ARCHITECT
LICENSE No.1181

DATE OCTOBER 20, 2011

SCALE 1:20
PROJECT No 11-4216
PURPOSE OF THIS SET DRC
SHEET **L-101**

File Name: P:\Projects\2011\114216 Related Group - Manero Site Plan\CADD Files\Drawings\11-4216-L-100-PLNT.dwg - (Plotted by: Erin Sudman on Monday, January 16, 2012 5:20:21 PM)

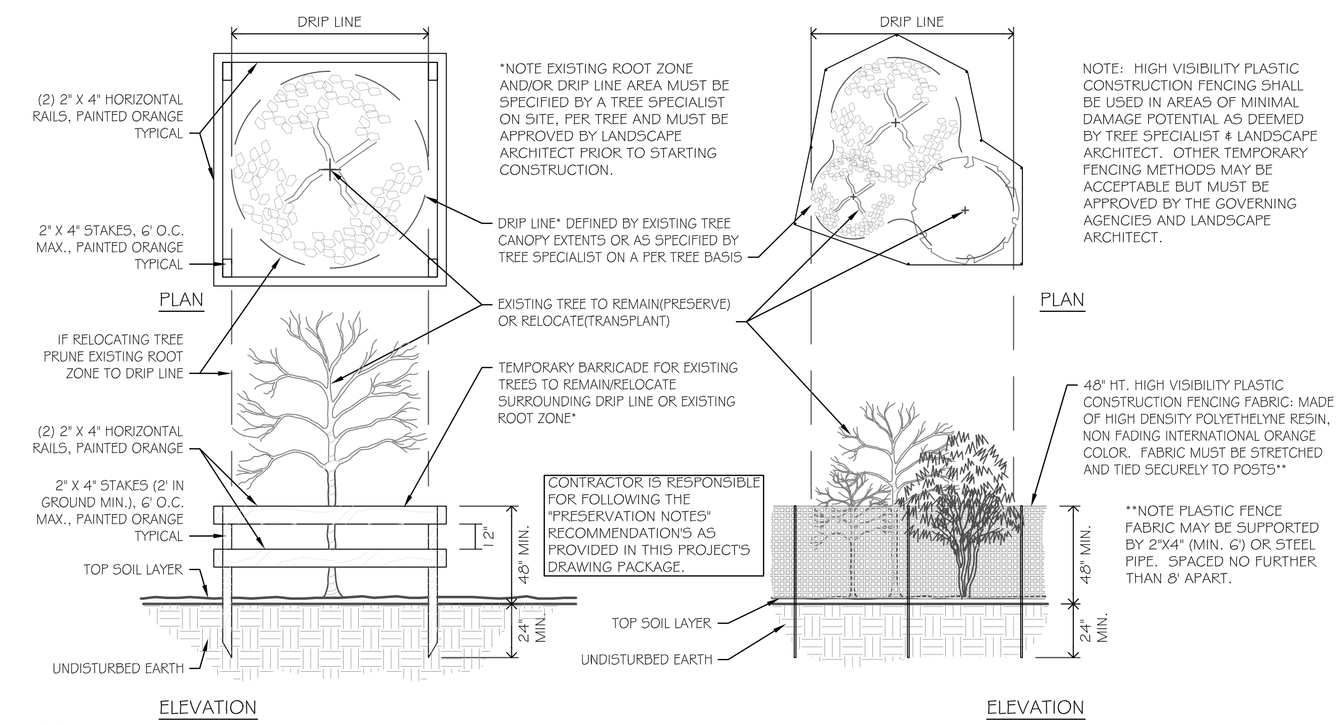

1 PROTECTIVE / FENCING BARRICADE DETAIL

NTS

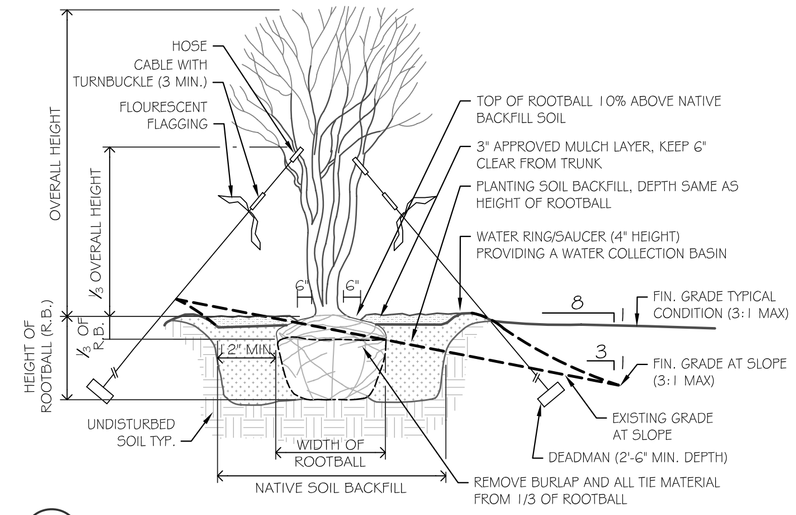

4 MULTI-STEM PLANTING DETAIL

NTS

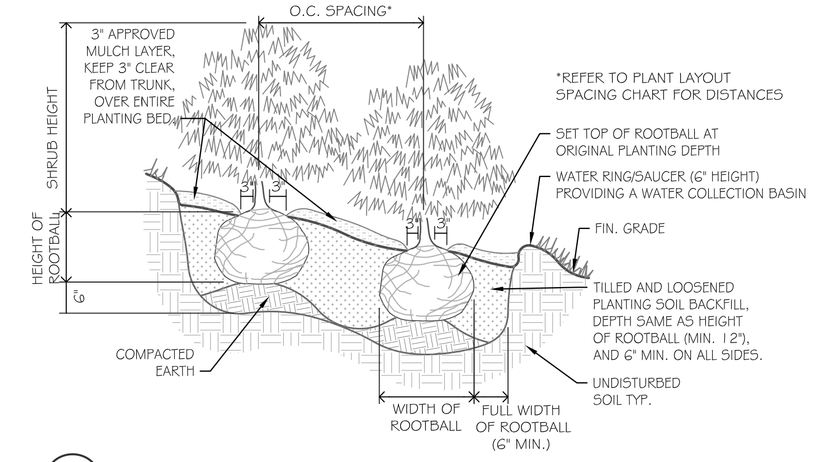

5 SHRUB PLANTING ON SLOPE DETAIL

NTS

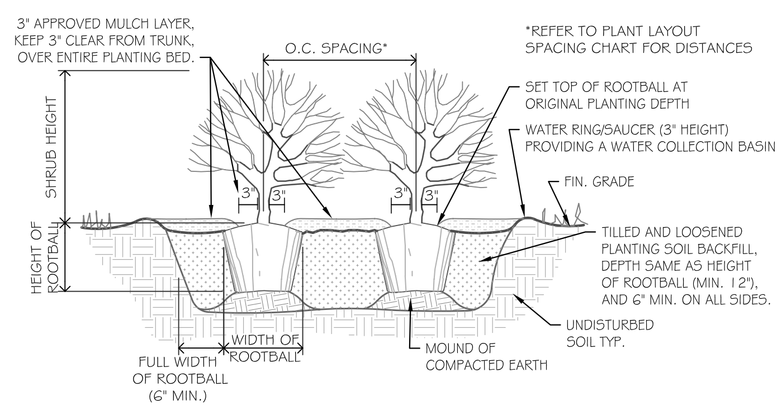

6 SHRUB PLANTING DETAIL

NTS

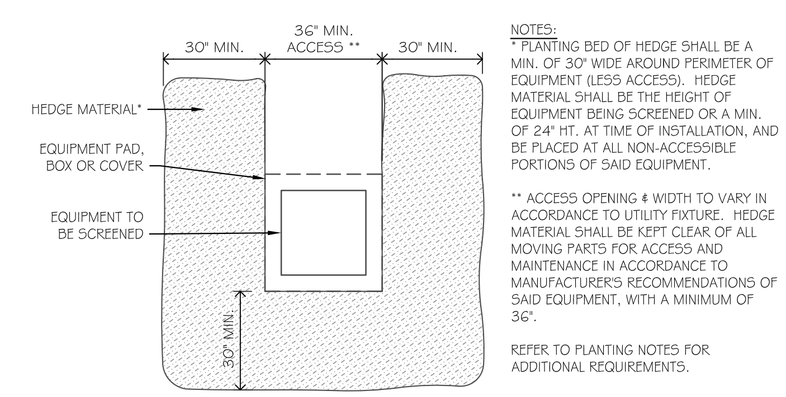

7 UTILITY PAD SCREENING DETAIL

NTS

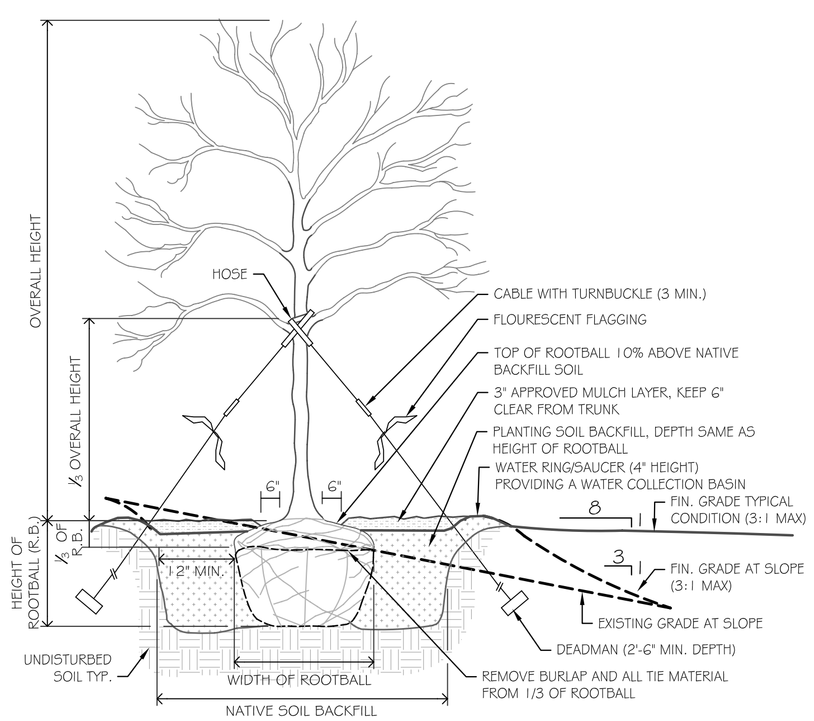

2 TREE PLANTING DETAIL

NTS

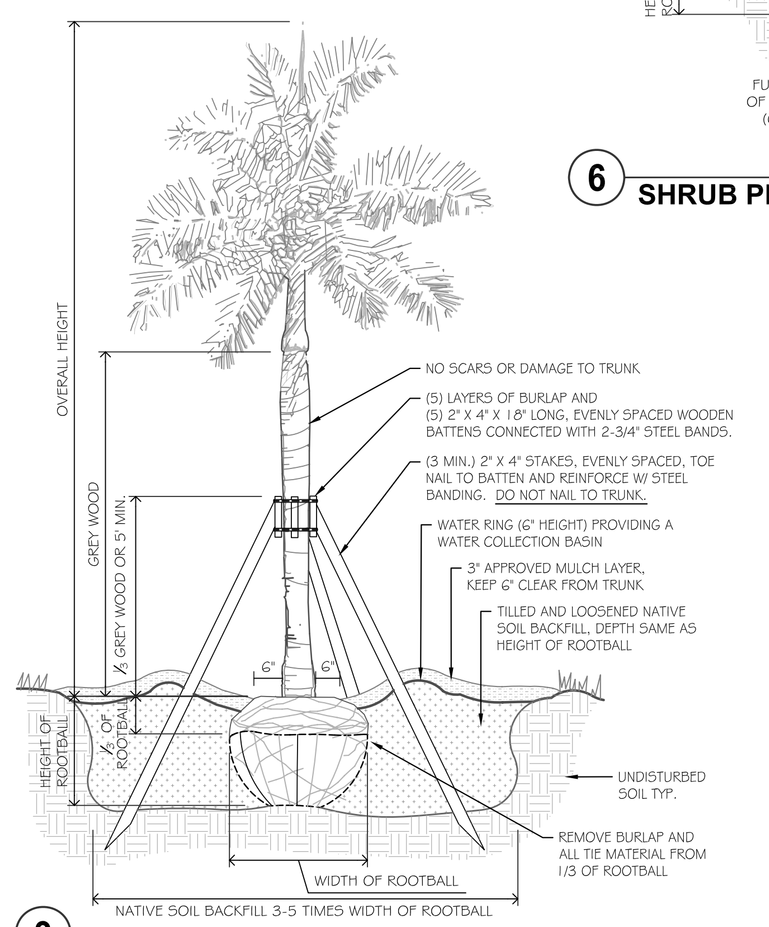

3 PALM PLANTING DETAIL

NTS

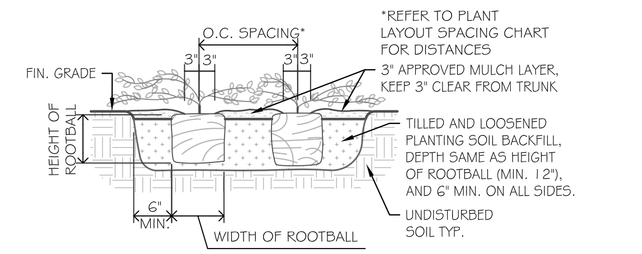

8 GROUNDCOVER PLANTING DETAIL

NTS

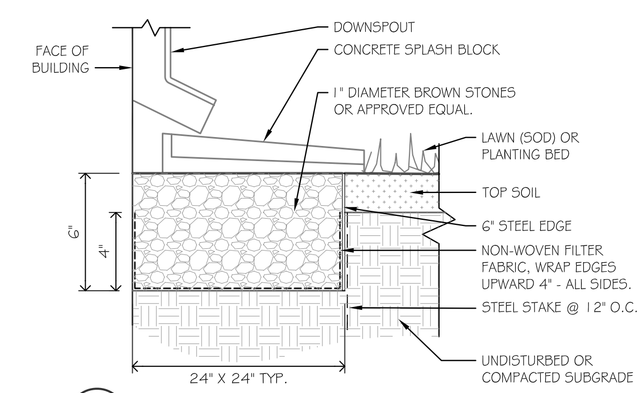

10 DETAIL AT DOWNSPOUTS (TYP)

NTS

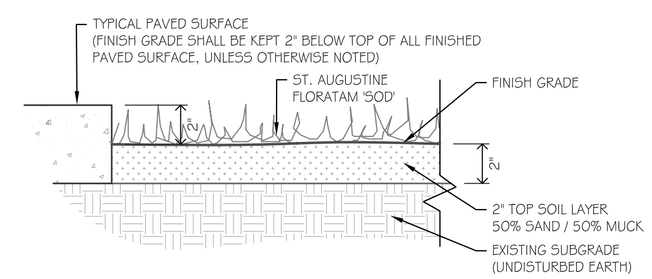

9 SOD PLANTING DETAIL

NTS

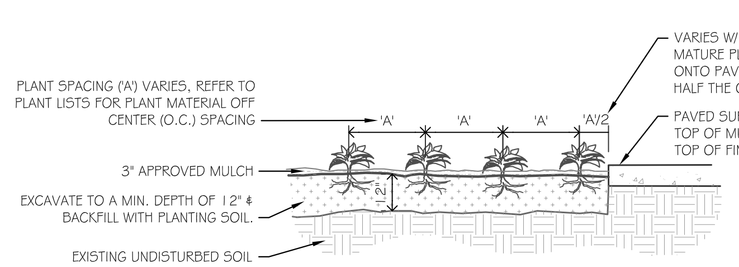

SECTION OF PLANTING BED EDGE

GROUNDCOVER / SHRUB SPACING CHART

PLANT SPACING ('A')	ROW SPACING ('B')
6 IN. O.C.	5 IN. O.C.
8 IN. O.C.	7 IN. O.C.
10 IN. O.C.	9 IN. O.C.
12 IN. O.C.	10 IN. O.C.
15 IN. O.C.	13 IN. O.C.
18 IN. O.C.	15 IN. O.C.
24 IN. O.C.	21 IN. O.C.
30 IN. O.C.	26 IN. O.C.
36 IN. O.C.	31 IN. O.C.
48 IN. O.C.	41 IN. O.C.
54 IN. O.C.	46 IN. O.C.
60 IN. O.C.	52 IN. O.C.
ROW SPACING = PLANT SPACING X 0.86	

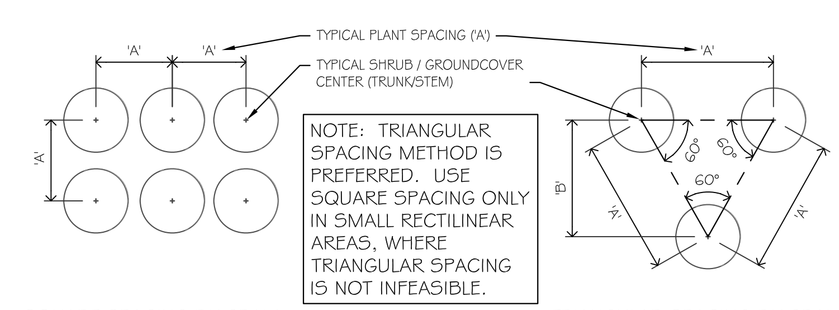

SQUARE SPACING DIAGRAM

TRIANGULAR SPACING DIAGRAM

11 GROUNDCOVER & SHRUB LAYOUT & SPACING DETAIL

NTS

LANDSCAPE DETAIL NOTES:

1. TYPICAL PLANTING DETAILS ARE DIAGRAMMATIC AND MUST NOT BE SCALED. REFER TO WRITTEN DIMENSIONS & NOTES FOR DISTANCES, AS SHOWN PER DETAIL.
2. ALL PLANT MATERIAL SHALL BE FLORIDA NUMBER 1 OR BETTER, AS DEFINED IN THE 'GRADES & STANDARDS FOR NURSERY PLANTS' BY THE STATE OF FLORIDA DEPARTMENT OF AGRICULTURE.
3. IF ON SITE CONFLICTS OCCUR, WHEN APPLYING TYPICAL PLANTING INSTALLATION METHODS (PER THESE DETAILS) WITHIN CONSTRAINED AREA(S) OR OTHER NON-CONFORMING CONDITION(S) LANDSCAPE CONTRACTOR SHALL CONTACT LANDSCAPE ARCHITECT PRIOR TO INSTALLATION.
4. REFER TO GENERAL PLANTING NOTES FOR ADDITIONAL INFORMATION AND REQUIREMENTS.

ABREVIATIONS / DEFINITIONS:

ADA	AMERICAN WITH DISABILITIES ACT
ALT	ALTERNATE
APPROX	APPROXIMATE
ARCH	ARCHITECT (ARCHITECTURAL)
B&B	BALLED / BURLAPPED
BLDG	BUILDING (STRUCTURE)
BR	BARE ROOT
CAL	CALIPER
CERT	CERTIFIED
CL	CENTERLINE
CLF	CHAIN LINK FENCE (VINYL CLAD FENCE)
COL	COLUMN
CONC	CONCRETE
CMU	CONCRETE MASONRY UNIT
CONT	CONTINUOUS
CT	CLEAR TRUNK
DBL	DOUBLE
DBH	DIAMETER AT BREAST HEIGHT
DIA	DIAMETER
DWG(S)	DRAWING (DRAWINGS)
ELEC	ELECTRICAL (ELECTRICAL ENGINEER)
ENG	ENGINEER
EQUIP	EQUIPMENT
EOP	EDGE OF PAVEMENT
EXIST	EXISTING
EXT	EXTERIOR
FBC	FLORIDA BUILDING CODE
FG	FIELD GROWN
FIN	FINISH
FT	FEET
GAL	GALLON
GW	GREY WOOD
HC	HANDICAP (ACCESSIBLE)
HT	HEIGHT
HORIZ	HORIZONTAL
ID	IDENTIFICATION
IN	INCH
MAX	MAXIMUM (MEASUREMENT MUST BE EQUAL OR LESS)
MIN	MINIMUM (MEASUREMENT MUST BE EQUAL OR GREATER)
MISC	MISCELLANEOUS
MULT	MULTIPLE
NIC	NOT IN CONTRACT (NOT INCLUDED, OR BY OTHERS)
NTS	NOT TO SCALE
OA	OVERALL
OC	ON CENTERS
PL	PROPERTY LINE (OR PLAT LIMIT/LINE)
POC	POINT OF CONNECTION
PPM	PARTS PER MILLION
PPP	PLANTS PER POT
PT	PRESSURE TREATED PINE
SYM	SYMBOL
QTY	QUANTITY
RAD, (R)	RADIUS (OR RISER)
REINF	REINFORCE
SGL	SINGLE
SIM	SIMILAR
SPEC(S)	SPECIFICATION (SPECIFICATIONS)
SPRD	SPREAD (OVERALL WIDTH OF CANOPY)
SQ	SQUARE
SS	STAINLESS STEEL
STD	STANDARD
TEMP	TEMPORARY
TBD	TO BE DETERMINED
TYP	TYPICAL
W/	WITH
W/O	WITHOUT

CALL 48 HOURS BEFORE YOU DIG IN FLORIDA
IT'S THE LAW!
811 or
1-800-432-4770
SUNSHINE STATE ONE CALL OF FLORIDA, INC.

NO	DATE	REVISION	BY	NO	DATE	REVISION	BY

DESIGNED EMS DATE 6/29/11
CHECKED MC DATE ----
ISSUED FOR ---- DATE ----

Calvin, Giordano & Associates, Inc.
EXCEPTIONAL SOLUTIONS
1800 Eller Drive, Suite 600, Fort Lauderdale, Florida 33316
Phone: 954.921.7781 Fax: 954.921.8807
Certificate of Authorization LC00000339

BEACHWALK
2600 EAST HALLANDALE BEACH BOULEVARD
HALLANDALE BEACH, FLORIDA
SITE PLAN APPROVAL SET - NOT FOR CONSTRUCTION

LANDSCAPE DETAILS

MICHAEL CONNER, R.L.A.
STATE OF FLORIDA REGISTERED LANDSCAPE ARCHITECT
LICENSE No.1181
DATE JANUARY 17, 2012

SCALE 1:20
PROJECT No 11-4216
PURPOSE OF THIS SET DRC
SHEET **L-500**

File Name: P:\Projects\2011\114216 Related Group - Manero Site Plan\CADD Files\Drawings\11-4216-L-100-PLNT.dwg - (Plotted by: Erin Sudman on Tuesday, January 17, 2012 9:26:05 AM)

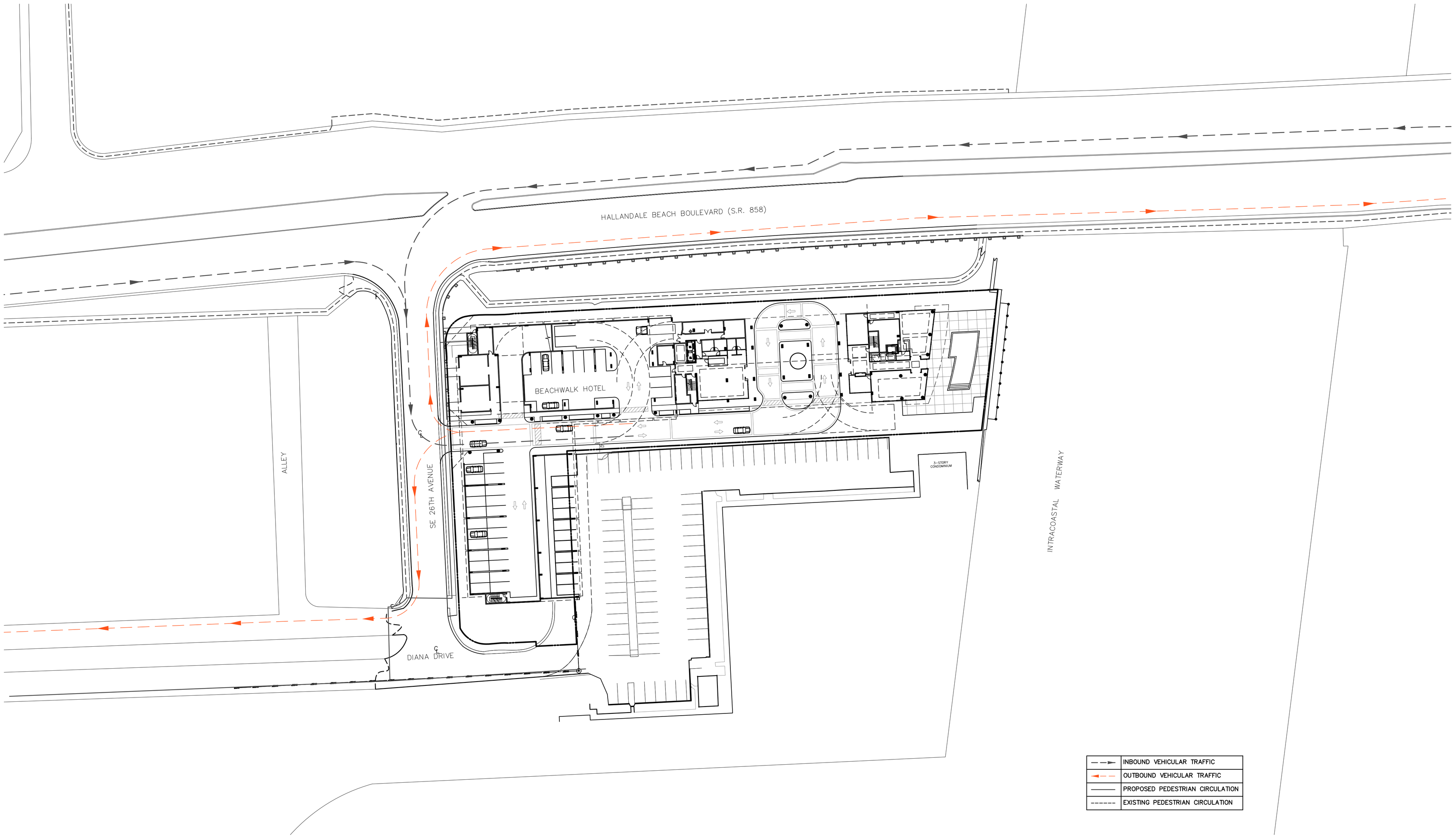

PRELIMINARY NOT FOR CONSTRUCTION

NO	DATE	REVISION	BY	NO	DATE	REVISION	BY

DESIGNED ---- DATE ----
CHECKED ---- DATE ----
ISSUED FOR ---- DATE ----

Calvin, Giordano & Associates, Inc.
EXCEPTIONAL SOLUTIONS
1800 Eller Drive, Suite 600, Fort Lauderdale, Florida 33316
Phone: 954.921.7781 Fax: 954.921.8807
Certificate of Authorization 514

BEACHWALK
2600 EAST HALLANDALE BEACH BOULEVARD
HALLANDALE BEACH, FL
AGENCY APPROVAL SET - NOT FOR CONSTRUCTION

CIRCULATION PLAN

DOUGLAS R. TAYLOR, P.E.
STATE OF FLORIDA PROFESSIONAL ENGINEER
LICENSE No. 50569
DATE: JANUARY 16, 2012

SCALE 1"=40'
PROJECT No 11-4216
PURPOSE OF THIS SET ----

SHEET: ----
L501
OF ---- SHEETS

File Name: P:\Projects\2011\114216 Related Group - Manero Site Plan\cadd Files\X-Ref\114216-C-SP-CIRCULATION.dwg - (Plotted by: Erin Sudman on Monday, May 21, 2012 10:49:52 AM)