December 12, 2008

Ms. Christy Dominguez
City of Hallandale Beach
400 South Federal Highway
Hallandale Beach, FL 33009

**VIA HAND DELIVERY**

Re: **The Village at Gulfstream Park**
**ka/jn**: 05044-05/41
**Phase 2 Major Development Plan – 2nd Submittal**
**Building 1200 Addition for Crate & Barrel**
**Building 800 Addition for Mixed-Use Tenants**

Dear Ms. Dominguez:

On behalf of the Gulfstream Park, LLC we are pleased to submit to you the Phase 2 Major Development Plan - 2nd Submittal for The Village at Gulfstream Park Mixed Use Development. Phase 2 Development consists of the following components:

1. **Tenant Space 1290/1280**: The construction of a two-story, ±41,500 SF GBA addition to the existing Building 1200, Type 1A unlimited area, unlimited height mixed-use building. Of this area indicated ± 6,700 SF is anticipated to be used for a small in-line tenant with the remainder proposed for use as a Crate & Barrel Store.

2. **Building 800**: The incorporation of a new Building 800 to the north of Breeze Way. This ±28,400 SF building is anticipated to accommodate mercantile and furniture store tenancies. Please note that this building is no different that the previously approved multi-tenant buildings owned by Gulfstream Park, LLC.

Please note that the MDP First Submittal Documents dated November 21, 2008 have been revised to incorporate comments received during our December 2, 2008 meeting at your offices. This meeting was attended by Mr. Richard Cannone, Christy Dominguez, Tony Gonzalez, Richard Labinsky of the Department of Public Works, Will Voegele and Stephanie Dorsey of FCD and me.

**A. COVER LETTER & DOCUMENTS** - 19 copies of the documents referenced below:

This cover letter describes the component of the MDP Submittal and also includes the following document:

1. Copy of the completed City of Hallandale Beach Major Development Application Form. The executed and notarized original application was submitted to you as a part of the Initial Submittal of November 21, 2008.
2. Trip Threshold Definition Memorandum dated November 19, 2008 from Richard Cannone of the City of Hallandale Beach relative to including 'home furnishing store' as an additional land use category for trip threshold calculations. This Memorandum references, and attaches, the City of Hallandale Beach Ordinance No. 2006-24 adopting the Development Order for the Village at Gulfstream Park as approved on November 6, 2006.
3. Village at Gulfstream Park Phase 2 Parking Recommendation Memorandum - Phase 2 dated November 20, 2008 as prepared by DKS Associates.
4. Memorandum of Air Quality License for Site Planning Facilities dated December 5, 2008 as prepared by Kimley-Horn & Associates.
5. Cumulative Traffic Generation Calculations dated November 19, 2008 as prepared by Kimley-Horn & Associates.

6. Licenses and Permits currently in progress for the Phase 2 area **as furnished by Kimley-Horn & Associates**
   a. Broward County Health Department Water Main Permit dated October 21, 2008 for VGP Phase 1c (since changed to Phase 2).
   b. Surface Water Management License Modification for VGP Phase 1 and Phase 2 dated September 18, 2008.
   c. License for Installation of Wastewater Collection/Transmission System for VGP Phase 2.
   d. Surface Water Management License Application for Phase 2.

**B. SITE DEVELOPMENT and PROJECT LEASE PLANS**

4 Full-Size and 15 - 11" X 17" Drawings

1. Sheet SP.CS.10.05: Phase 2 Site Plan City Submission dated December 12, 2008 as prepared by KA, inc. This Site Plan incorporates the Crate & Barrel Store within Space 1290 of Building 1200 and the addition of Building 800. The building areas illustrated on this Sheet are also used within the Parking Calculations.

   This Site Plan has been revised as discussed during our meeting of Dec. 2, 2008 as follows:

   a. No changes were made to the Crate and Barrel Site Plan.
   b. Revised Building 800 Site Plan as requested to better define the south service entry drive for both incoming and internal traffic circulation.
   c. Designated the Building 800 parking spaces west of the Service Area as 'Employee Parking'.
   d. Added landscape areas at the west and north sides of Building 800.
   e. We are anticipating removing the no parking designation at street lanes adjacent to fire hydrants as previously required by the Fire Department once we receive confirmation from The Fire Department. It was felt that these designated areas were unnecessary and potentially confusing to the public.

2. In response to clarifications requested on the service paths for both Crate & Barrel and Building 800 we have provided the following:
   a. Exhibit AT-1A and AT-1B dated December 12, 2008: Crate & Barrel Auto-Turn Study.
   b. Exhibit AT-2A dated December 12, 2008: Building 1200 Moving Van Auto-Turn Study.
   c. Exhibit AT-3A and AT-3B dated December 12, 2008: Building 800 Auto-Turn Study.

3. Sheet SP.CS.04A: Phase 1A Site Plan City Submission dated November 16, 2007 as prepared by KA, inc. submitted for record only. This is the Site Plan most recently approved by the City for reference in reviewing the development as previously approved by the City.

4. Lower Level and Upper Level Lease Plans dated October 1, 2008 as prepared by Forest City Tenant Coordination. These Plans illustrate the lease spaces for the retail/restaurant/office core including Space 1290 proposed to be a Crate & Barrel Store.

**C. CIVIL ENGINEERING DRAWINGS** as prepared by Kimley-Horn and Associates, Inc.

4 Full-Size and 15 - 11" X 17" Drawings

1. Space 1290 Civil Drawings: Site Grading, Paving, Drainage and Underground Utility drawings dated November 5, 2008. These Drawings are unchanged from the First Submittal Package.
2. Building 800 Civil Drawings: Site Grading, Paving, Drainage and Underground Utility drawings dated December 12, 2008. These drawings have been revised by the Civil Engineer to incorporate comments received at the December 2, 2008 MDP review meeting.

**D. LANDSCAPE CONCEPT DESIGN DRAWINGS** as prepared by Glatting Jackson Kercher Anglin, Inc.

4 Full-Size and 15 - 11" X 17" Drawings

1. These drawings, prepared to include information necessary to confirm that the landscape design complies with the intent of City Ordinances, Code requirements and with the Village at Gulfstream Park LAC Design Guidelines, have been revised by the Landscape Architect to incorporate comments received at the December 2, 2008 MDP review meeting.
2. Calculations have been included for open area, landscape coverage and tree counts provided based upon acreage.

**E. ADDITION TO BLDG. 1200: CRATE & BARREL STORE**

4 full-Size and 15 - 11" X 17" Drawings unless indicated otherwise

1. Floor Plans dated December 12, 2008 as prepared by Crate & Barrel.
2. Colored Exterior Elevations dated December 12, 2008 as prepared by Crate & Barrel.
3. Photographs of the Crate & Barrel Material Board as prepared by Crate & Barrel.
4. Statement of Compliance with the LAC Building Design Guidelines as prepared by Crate & Barrel attached/part of drawing.

**F. BUILDING 800**

4 Full-Size and 15 - 11" X 17" Drawings unless indicated otherwise

1. Floor Plans dated December 12, 2008 as prepared by Callison.
2. Colored Exterior Elevations dated December 12, 2008 as prepared by Callison. These Elevations have been revised to accommodate your comments at the December 2, 2008 as follows:
   a. Reduce the height of the west screen walls to 11'-0" and the north screenwall to 10'-0" to provide better proportions relative to their limited length.
   b. Incorporate the building aesthetics into the service area walls including the use of materials and proportion.
   c. These Elevations have also been adjusted to wrap finishes around the west elevation consistent with other contextual materials used on the north elevation.
3. Photographs of the Building 800 Material Board as prepared by Callison.
4. Statement of Compliance with the LAC Building Design Guidelines as prepared by Callison.

**G. PREVIOUSLY SUBMITTED DOCUMENTATION APPLICABLE TO THIS SUBMITTAL**

The previously submitted and approved MDP Submittals for Phase 1 and Phase 1A of the Village of Gulfstream Park included documents that are applicable to this phase of development. This includes, but is not limited to the following:

5. Water Main Construction Permit dated June 23, 2006 Broward County.
6. Topographic Surveys as prepared by Calvin-Giordano & Associates dated July 18, 2005.
7. Forest City Enterprises, Inc. 2005 Annual Report.
8. The Village At Gulfstream Park Design Guidelines Booklet approved November 6, 2006.
9. The Village At Gulfstream Park Design Development Presentation Book.
10. Phase1 and Phase 1A Civil, Landscape/Hardscape and Architectural Design Packages.

The required electronic information will be forwarded to you upon your review and confirmation that this package is acceptable as submitted.

We look forward to receiving your comments on this submittal. Should you have any questions please do not hesitate to contact Will Voegele or Stephanie Dorsey of FCD, Britt Stephens of Kimley-Horn or me.

Sincerely,

**ka architecture**

Sue Bercik

Susan J. Bercik
Sr. Project Manager

c: Letter Only
Richard Cannone - City of Hallandale Beach Planning Department
Will Voegele - Forest City Development
Stephanie Dorsey - Forest City Development
David Northcote - McCasey Group
Joginder Singh - Forest City Commercial Construction
Joe Natella - Forest City Commercial Construction
Jerry Stary - Forest City Commercial Construction
Britt Stephens - Kimley-Horn and Associates, Inc.
Chris Heggen - Kimley-Horn and Associates, Inc.
Jeff Sugar - Glatting Jackson Kercher Anglin. Inc.
Peter Wehrli - Crate & Barrel
Elijah Driscol - Callison
TF Simecek
File 05044-02/41

X:\Projects\05044\Documents\WORD\Correspondence\2008-12-12 SJB LT City Subm. MDP Phase 2 05044.doc/sjb/

# CITY OF HALLANDALE BEACH
# APPLICATION FORM

NO APPLICATIONS ARE AUTOMATICALLY SCHEDULED FOR **ANY** MEETINGS. APPLICATIONS MUST BE DETERMINED TO BE COMPLETE BY STAFF BEFORE ANY PROCESSING OCCURS.

**PLEASE PRINT OR TYPE**

Date of Application: November 21, 2008
Name of Owner: The Village of Gulfstream Park, LLC
Name of Applicant, if different from owner: -
Mailing Address: 50 Public Square, Suite 1000B, Cleveland, Ohio 44113
Telephone: (216) 416-3230
Name of Authorized Representative, if different from applicant: KA, Inc.
Mailing Address: 1468 West 9th Street, Cleveland, Ohio 44113
Telephone: (216) 781-9144
Location of Subject Property: 201 through 901 S. Federal Highway, Hallandale Beach
Folio Number: 5142.2751.001
Legal Description: Village of Gulfstream Park, PB177, page 46

**TYPE OF APPLICATION** (Check the ones which apply to the request(s))

____REZONING FROM: _____ District TO: _____ District
SIZE OF SUBJECT PROPERTY TO BE CONSIDERED FOR REZONING_____ (acres)
____CONDITIONAL USE
____VARIANCE
____LAND USE PLAN AMENDMENT
____REDEVELOPMENT AREA MODIFICATION
____SPECIAL SIGN VARIANCE
____TEXT CHANGES (CITY CODE) _____
____MINOR DEVELOPMENT (Less than ten (10) residential units or less than 4,000 sq. ft. gross floor area)
Residential-Number of Units _____
Commercial-Sq. Ft. _____
X MAJOR DEVELOPMENT(Ten or more residential units or more than 4,000 square feet of gross floor area)
Residential-Number of Units NA
Commercial-Sq. Ft. ± 69,800 SF
____Platting or Replatting a Subdivision or portion thereof
(Size of property _____ acres)
____Other _____

**BRIEF DESCRIPTION OF REQUEST**

- Submittal of Phase 2 to the previously approved MDP Phase 1A for the Village of Gulfstream.
- Please reference the attached Cover Letter dated 11/21/08.

## AUTHORIZED REPRESENTATIVE

I/we are fully aware of the request being made to the City of Hallandale Beach. If I/we are unable to be present, I/we hereby authorize _____ (individual/firm) to represent me/us in all matters related to this application. I/we hereby acknowledge that the applicable fee was established to offset administrative costs and is not refundable.

State of Florida
County of Broward
The foregoing instrument was acknowledged

By: _____
(owner/agent signature*)

Before me this 19 day of Nov, 20 08

By Loren Louche'
(Name of person acknowledging)

_____
(Joint owner signature)

Notary Loren Louche'
(Signature of Notary Public – State of ~~Florida~~ Ohio)

Personally know ✓ or Produced identification _____

Type of identification produced: _____ or Driver's License _____

*If joint ownership, both parties must sign. If partnership, corporation or association, authorized officer must sign on behalf of the group. A notarized letter of authorization from the owner of record must accompany the application, if an authorized agent signs for the owner(s).

LOREN M. LOUCHE', Notary Public
STATE OF OHIO-Cuyahoga County
My Commission Expires Nov. 28, 2011

CITY OF HALLANDALE BEACH
City of Choice

City of Hallandale Beach

400 South Federal Highway
Hallandale Beach, FL 33009-6422
Phone: (954) 458-3251
Fax: (954) 457-1342

November 19, 2008

Stephanie Dorsey, Development Associate
Forest City Commercial Management Inc.
1000B Terminal Tower
Cleveland, OH 44113

**RE: Trip Threshold Definition**

Dear Stephanie:

You asked whether Ordinance 2006-24 (see attached) would need to be amended to include "home furnishing store" as an additional land use category for trip threshold calculations in addition to those enumerated.

Exhibit 6 of the ordinance provided the following language, "All other trip generation rates based upon data published by ITE in *Trip Generation, 7th Edition*". The intent of this language was to evaluate additional uses than those enumerated on the exhibit as your development moved forward. Provided "home furnishing store" is a defined use within the *ITE Trip Generation, 7th Edition,* an amendment would not be required.

Should you have any questions or need additional information, please do not hesitate to contact me.

Best regards,

Richard D. Cannone
Director of Development Services

cc: D. Mike Good, City Manager
Nydia Rafols, Deputy City Manager
Christy Dominguez, Director of Planning and Zoning
Evy Kalus, Broward County Development and Environmental Regulation

ORDINANCE NO. 2006 - 24

AN ORDINANCE OF THE CITY OF HALLANDALE BEACH, FLORIDA, ADOPTING THE DEVELOPMENT ORDER FOR THE VILLAGE AT GULFSTREAM PARK DEVELOPMENT OF REGIONAL IMPACT, WHICH CONSISTS OF APPROXIMATELY 60.8 ACRES WITHIN THE CITY OF HALLANDALE BEACH, FLORIDA LOCATED GENERALLY SOUTH OF HALLANDALE BEACH BOULEVARD, EAST OF FEDERAL HIGHWAY, NORTH OF THE CITY LIMITS AND WEST OF THE GOLDEN ISLES SUBDIVISION; PROVIDING FOR THE DEVELOPMENT OF A MIXED-USE RETAIL, OFFICE, ATTRACTION, HOTEL, AND RESIDENTIAL PROJECT; PROVIDING FINDINGS OF FACT AND CONCLUSIONS OF LAW; PROVIDING CONDITIONS AND OBLIGATIONS RELATED TO THE DEVELOPMENT; PROVIDING BUILDOUT AND EXPIRATION DATES AND OTHER GENERAL CONDITIONS; PROVIDING FOR RECORDING, RENDITION AND MONITORING; PROVIDING FOR A PROHIBITION AGAINST DOWN-ZONING; PROVIDING AN EFFECTIVE DATE.

WHEREAS, Gulfstream Park Racing Association, Inc. (the "Applicant" and the "Owner") has applied for approval of the Village at Gulfstream Park Development of Regional Impact pursuant to Section 380.06, Fla. Stat. (2006);

WHEREAS, The Village of Gulfstream Park, LLC is the agent of the Owner and the Developer of the project that is subject to this Development Order; and

WHEREAS, the proposed Village at Gulfstream Park Development of Regional Impact is located wholly within the City of Hallandale Beach, Broward County, Florida (the "City");

WHEREAS, the City is required to consider and vote upon a development order approving the proposed Village at Gulfstream Park Development of Regional Impact; and

WHEREAS, the City Commission of the City of Hallandale Beach has received and considered the DRI Impact Assessment Report and recommendations of the South Florida Regional Planning Council ("SFRPC") dated June 5th, 2006;

NOW, THEREFORE, BE IT ORDAINED BY THE CITY COMMISSION OF THE CITY OF HALLANDALE BEACH, FLORIDA:

SECTION 1. FINDINGS OF FACT.

1. The foregoing recitals are ratified and confirmed as being true and correct and are hereby made a part of this Ordinance.

2. The proposed development will take place on approximately 60.8 acres legally described in "Exhibit A" (the "DRI Property").

3. The proposed development is not in an area of critical state concern designated pursuant to the provisions of Section 380.05, Florida Statutes.

4. All statutory and regulatory notice requirements have been met.

SECTION 2. CONCLUSIONS OF LAW.

1. A state land development plan does not exist for this portion of the City of Hallandale Beach and therefore the proposed development does not unreasonably interfere with such a plan.

2. The proposed development is consistent with the State Comprehensive Plan.

3. The proposed development is consistent with the Broward County Comprehensive Plan and Land Development Regulations.

4. The proposed development is consistent with the City of Hallandale Beach Comprehensive Plan and Land Development Regulations.

5. The proposed development is consistent with the report and recommendations of the South Florida Regional Planning Council submitted pursuant to subsection 380.06(12) and dated June 5, 2006.

6. The proposed development as approved by this Development Order makes adequate provision for the public facilities needed to accommodate the impacts of the proposed development.

7. The Village at Gulfstream Park DRI is approved for the development described in Section 3 (the "Development"), subject to the conditions, restrictions, and limitations specified in this Development Order.

SECTION 3. DESCRIPTION OF DEVELOPMENT.

1. Name of the Development

The Village at Gulfstream Park

2. Authorized Agent

The Village at Gulfstream Park, LLC
Attn: Managing Member

3. Developer

The Village at Gulfstream Park, LLC, its successors and assigns

4. Owner

Gulfstream Park Racing Association, Inc.; its successors and assigns

5. Development Program

| | |
|---|---|
| Office | 140,000 s.f. |
| Retail | 750,000 s.f. |
| Residential | 1,500 units[1] |
| Hotel | 500 keys |
| Movie Theater | 2,500 seats |
| Open Space | Minimum of 1.2 acres |

In all cases, no Certificates of Occupancy shall be issued for Development that would, in the aggregate, generate traffic volumes that exceed 1,800 total external trips as shown in the Consolidated ADA referred to in Section 10 herein.

[1] includes a minimum of 75 Affordable/Workforce Housing on-site in accordance with Section 4, Condition 16 of this Development Order (below).

SECTION 4. CONDITIONS OF APPROVAL.

The application for development approval is approved subject to the following conditions:

THE APPLICANT, ITS SUCCESSORS, AND/OR ASSIGNS, JOINTLY OR SEVERALLY, SHALL:

1. Ensure that stormwater runoff is retained within the project site in accordance with applicable regulations of the South Florida Water Management District (SFWMD), Broward County and the City of Hallandale Beach. Design, construct and maintain the stormwater management system for the project and any additions, expansions, or replacements to the stormwater management system to meet the following standards:

a. Comply with the regulations and requirements of the South Florida Water Management District, Broward County Environmental Protection Department (EPD), and the City's comprehensive plan drainage level of service requirements for surface water management in effect at that time.

b. Install pollutant retardant structures to treat all stormwater runoff at each of the new project outfall structures in accordance with the stormwater management system drainage permits and master drainage plan, and periodically remove pollutant accumulations as required by the stormwater permitting agencies.

c. Use silt screens and aprons during any phase of project construction that may increase turbidity in adjacent surface waters.

d. Mulch, spray, or grass exposed areas to prevent soil erosion, minimize air pollution and stormwater runoff.

2. Design, construct, and maintain the onsite irrigation system for the project, expansions, or replacements to the onsite irrigation system to minimize salt-water intrusion and excessive irrigation in accordance with SFWMD guidelines. When

practicable, use water conserving techniques to reduce the demand on the region's potable water supply; including the installation of rain sensors on irrigation timers, and compliance with restrictions on irrigation timing as required by the City of Hallandale Beach.

3. Incorporate the use of water sensors, ultra-low volume water use plumbing fixtures, self-closing and/or metered water faucets, and other water conserving devices/methods to reduce the demand on the region's potable water supply. These devices and methods shall meet the criteria outlined in the water conservation plan of the public water supply permit issued to Broward County by the SFWMD.

4. a. Prior to issuance of the first building permit for any permanent structure in accordance with the Development Program provided in Section 3 and Section 4, Condition 6 of this Development Order ensure that sufficient wastewater capacity exists to meet the wastewater flows of the project.

b. Prior to issuance of the first certificate of occupancy for any permanent structure in accordance with the Development Program in Condition 6, complete or cause the completion of appropriate expansions and improvements to the lift stations and force mains which are necessary to provide wastewater service for the project.

5. Comply with the tree preservation requirements and the landscaping standards of the City of Hallandale Beach. When practicable, the Applicant should follow xeriscape principles in landscape design and the selection of species for planting. Substitute landscaping species may only be used if written approval is provided by the City of Hallandale Beach in consultation with the Broward County EPD and SFRPC staff. Such approval will be based on the following criteria for plant materials:

a. Does not require excessive irrigation or fertilizer;

b. Is not prone to insect infestation or disease;

c. Does not have invasive root systems; and

d. Other criteria as may be appropriate.

6. The Applicant shall be permitted to develop a maximum amount of development in accordance with the land uses listed below, subject to the required federal, state and local approvals. In all cases, no Certificates of Occupancy shall be issued for Development that would, in the aggregate, generate traffic volumes that exceed 1,800 total external trips as shown in the Consolidated ADA. The development program shall be developed in accordance with the table below:

DEVELOPMENT PROGRAM SUMMARY

| Land Use* | Proposed Total Development |
|---|---|
| Office | 140,000 SF GFA** |

| | |
|---|---|
| Retail | 750,000 SF GLA*** |
| Residential | 1,500 DUs**** |
| Hotel | 500 keys |
| Movie Theatre | 2,500 Seats |

* Self-Storage facilities and warehouses are not permitted as principal uses within the Village at Gulfstream Park. Storage space may be provided as accessory space within individual buildings within the development to serve residents and tenants of the project.

** Square Feet; Gross Floor Area (GFA)
*** Square Feet; Gross Leasable Area (GLA)
**** Dwelling Units (DU), including a minimum of 75 Affordable/Workforce Housing on site

7. Utilize economic development enhancement resource agencies and programs designed to involve small and minority businesses in the development and expansion of permanent job opportunities within the project. Examples of such agencies and programs include, but are not limited to, those contained in the South Florida Small and Minority Business Resource Directory. The Developer shall attempt to access the range of job skills available in the region and promote greater labor force enhancement. At a minimum, the Developer is encouraged to provide potential commercial tenants with information about employment and training agencies that maintain a database of trained/skilled workers to consider in meeting the project's employment needs. This information shall be biennially updated and submitted as a part of the Biennial Status Report, using a form that is attached as Exhibit 1.

8. This DRI is not anticipated to include laboratories or other uses which would have a significant hazardous materials generation/usage impact as defined in Rule 9J-2044(2)(f) and (5)(a) of the Florida Administrative Code. In the event that hazardous material usage on any project within the DRI will have a significant impact, prior to issuance of a certificate of occupancy for any such use, the Owner(s) and/or Developer(s) of the specific project ("Project Developer(s)"), to the extent necessary and appropriate, after consultation with any leaseholders, shall submit a Hazardous Materials Management Plan (HMMP) for review and approval by the City of Hallandale Beach, the Broward County Environmental Protection Department (EPD), the Florida Department of Environmental Protection (FDEP), and the South Florida Regional Planning Council , which conforms with the requirements of Rule 9J-2.044(5)(b)2 of the Florida Administrative Code. The Project Developer(s), their successors and/or assigns, shall provide a copy of the approved plan to the City of Hallandale Beach Fire Department. The HMMP shall be incorporated into the development by lease as applicable and shall be incorporated into the project by sale agreement, restrictive covenant or other appropriate legally binding enforcement provision when any of the property is conveyed, as applicable.

9. a. No later than 180 days prior to the issuance of the first certificate of occupancy the Developer shall meet with Broward County Environmental Protection Department, Florida Department of

Environmental Protection and the South Florida Regional Planning Council to establish parameters for a Carbon Monoxide Air Quality Analysis and a Broward County EPD Parking Facility license. The analysis shall incorporate the methodology of the latest FDEP guidelines and shall address worst case carbon monoxide concentrations for each phase through build out. In addition, the analysis shall be limited to consideration of LOS "E" or "F" intersections impacted by 5% or more project traffic and surface parking area of 1500 vehicle trips per hour or parking garage of 750 vehicle trips per hour and any combination of surface parking and parking garage generating 1000 or greater trips.

b. No later than 90 days prior to the issuance of the first certificate of occupancy for any permanent structure in accordance with the Development Program provided in Condition 6, the Developer shall submit a Carbon Monoxide Air Quality Analysis, based upon the agreed methodology, to EPD, FDEP , SFRPC and the City of Hallandale Beach for their reviews and approvals. The analysis shall demonstrate that the National Ambient Air Quality Standards for Carbon Monoxide will not be violated as a result of the Development at buildout and, if necessary, shall include mitigation measures for which the Developer shall be responsible.

10. Shall provide a letter from the solid waste utility provider that the projected solid waste generated from the proposed development can be appropriately met by the off-site solid waste company prior to the issuance of building permits.

11. Shall comply with section 32-639 as may be amended of the City of Hallandale Beach Code of Ordinances (entitled "Garbage Collection by City; Private Haulers; Permit Required") as it may be amended from time to time, attached as Exhibit 5.

12. Incorporate, as practicable, energy conservation measures into the design and operation of projects developed within the DRI. At a minimum, Project Developers shall construct all development in conformance with the specifications of the applicable building code at the time of the issuance of the building permit and the Florida Energy Code. Consider using natural gas and/or renewable energy sources (e.g., solar heating) for water heating, space heating, air-cooling and lighting control. Monitor design review procedures and electrical energy conservation measures, proposed in the ADA, during the project construction phase to assess the effectiveness of same.

13. Assure that any fill material utilized at the site, whether from onsite excavation activities or from offsite sources, meets the clean soils criteria of the FDEP and EPD, as applicable.

14. a. The Applicant shall ensure the adequate provision of fire/rescue services necessary to serve the Development, to the City's satisfaction. Each Project Developer shall submit a site plan to the City Manager for review to identify unique space, equipment and/or facilities impacts that the project may generate.

b. The Applicant shall ensure adequate provision of police services for the Village at Gulfstream Park, to the City's satisfaction, and the

Applicant shall meet with the City's Police Department to discuss those services.

c. The Applicant shall provide a mini- or sub-station within the Development which shall provide a location for Police and EMS service personnel to staff during peak periods of operation within the Development. Said mini- or sub-station shall not be included as part of and reduced from any portion of the approved development program. Upon selection to the satisfaction of the City of space to be allocated to this use, the Applicant shall report this allocation as part of its Biennial Report.

15. Prior to requesting the first building permit for a residential structure within the Development, the Developer shall file a Declaration of Restrictive Covenant, to enable legal enforcement of its $2,000,000 commitment to the School Board of Broward County for school improvements within the City of Hallandale Beach and within the school feeder pattern serving City residents, which may include Hallandale Elementary School and Nichols Middle School. Prior to issuance of the first certificate of occupancy for a residential structure within the Development, the Developer must enter into a tri-party agreement with the School Board of Broward County and the City of Hallandale Beach to specify how the funds will be utilized, timed and dispersed in a manner that addresses the impacts created by the Development through buildout.

16. Construct or cause the construction of a minimum of 225 "affordable housing" and/or "workforce housing" units (Affordable/Workforce Housing Units) within the City of Hallandale Beach and in accordance with the City of Hallandale Beach's applicable affordable and workforce housing regulations and procedures, the provision of which is equivalent to 15% of the proposed residential units. A minimum of 75 Affordable/Workforce Housing Units will be built on site. These Affordable/Workforce Housing Units shall be completed in accordance with the following schedule or as otherwise agreed upon in accordance with the terms and conditions of the Development Agreement with the City of Hallandale Beach:

a. Prior to the issuance of the first certificate of occupancy for the 1st residential unit within the project, construct or cause the construction of a minimum of sixty (60) Affordable/Workforce Housing Units.

b. Prior to the issuance of the final certificate of occupancy for the 750th residential unit within the project, construct or cause the construction of an additional ninety (90) Affordable/Workforce Housing Units (for a total of 150 units) or in accordance with the terms and conditions of the Development Agreement.

c. Prior to the issuance of a final certificate of occupancy for the 1000th residential unit within the project, construct or cause the construction an additional seventy-five (75) Affordable/Workforce Housing Units (for a total of 225 units) or in accordance with the terms and conditions of the Development Agreement.

In the event of a conflict between this Ordinance and the Development Agreement, the terms and conditions of the Development Agreement shall control.

For the purpose of satisfying this condition, "affordable housing" units are as defined in Rule 9J-2.048, Florida Administrative Code and until such time as "workforce housing" is defined by legislation or ordinance, "workforce housing" units are defined as units priced so that a household earning an income between 120% and 140% of area median income will be able to afford rents and/or payments (inclusive of principal, interest, taxes and insurance) which will not exceed thirty percent (30%) of their gross annual income. Nothing shall preclude the Applicant of availing itself of any governmental or other applicable grant or assistance programs to satisfy this condition.

17. Primary project vehicle access points to the offsite roadway network will consist of the locations in Exhibit 4. Number, locations and configurations of project driveways may be adjusted upon approval by appropriate review agencies with jurisdiction over same and with approval of the City, through the major development review process.

18. The Applicant shall comply with the transportation improvements requirements contained in Groups A, B and C of Exhibit 3. Transportation mitigation measures shall be implemented by the Applicant as outlined in the schedule below. At a minimum, the total cost of these measures will equal the Applicant's calculated proportionate share cost of $6,574,082.52 and includes a minimum of $3,227,000 of transit-related improvements (the "Transit Funds"). The Applicant shall satisfy the regional Transportation Concurrency requirements of Broward County in accordance with Policy 3.4.23 of the Transportation Element of the 2006 Broward County Comprehensive Plan. It is understood that the Applicant intends to seek a credit from Broward County for its payment of the Transit Funds and nothing herein shall be construed to prohibit the Applicant from seeking Transit Concurrency credits from Broward County.

a. On or before January 15, 2007, the Applicant shall implement the following improvement as outlined in Exhibit 3:

- Item C-1

b. Prior to the issuance of the first Certificate of Occupancy for any permanent structure in accordance with the Development Program provided in Condition 6, the Applicant shall fund, construct or cause the construction, as applicable, of the following improvements outlined in Exhibit 3:

- Item B-1
- Item B-2
- Item B-3
- Item B-4
- Item B-5
- Item B-6
- Item B-7
- Item B-8
- Item A-3
- Item C-4

c. Prior to the issuance of Certificates of Occupancy for any permanent structure in accordance with the Development Program provided in Condition 6 exceeding 1,750 gross pm peak hour trips calculated in accordance with Trip Generation Rates as shown in Exhibit 6, the Applicant shall fund, construct or cause the construction, as applicable, of the following improvements outlined in Exhibit 3:

- Item A-1
- Item A-2
- Item C-5

d. Prior to the issuance of Certificates of Occupancy for non-residential structures in accordance with the Development Program provided in Condition 6 exceeding 1,750 gross pm peak hour trips calculated in accordance with Trip Generation Rates as shown in Exhibit 6, the Applicant shall fund, construct or cause the construction, as applicable, of the following improvements outlined in Exhibit 3:

- Item C-6

e. Twelve months after the first certificate of occupancy for any permanent non-residential structure in accordance with the Development Program provided in Condition 6, the Applicant shall fund, construct or cause the construction, as applicable, of the following improvements outlined in Exhibit 3:

- Item C-2

The Applicant shall fulfill its obligations for Item C-3 of Exhibit 3 at such time that the City of Hallandale Beach conducts the charrette mentioned in this Item.

19. Prior to the issuance of the first certificate of occupancy for any permanent non-residential structure in accordance with the Development Program provided in Condition 6, have open to traffic or cause to have open to traffic all site access-related improvements as described in Exhibit 4, pending final permit approval by appropriate review agencies with jurisdiction over same. The responsibility for these site access-related improvements, which may include traffic signals, shall be borne by the Applicant. These site access-related improvement costs are not part of the Proportionate Share requirements. In addition, Developer shall provide such mitigation pf traffic impacts on City roads as required by City Code and the Development Agreement.

20. Incorporate the following into the project design and operation:

a. Coordinate with Broward and Miami-Dade County Transit to establish a program that encourages transit use of the site. This program shall include performance objectives, and shall incorporate incentives such as transit passes for employees and promotions for visitors to use transit to access the site. These activities shall be coordinated with Broward County and Miami-Dade Transit as well as the Cities of Hallandale Beach and Aventura.

b. On an annual basis, encourage transit use, carpooling and vanpooling by provision of rideshare and transit information to tenants and employees, providing a transit superstop, provision of improved service on transit routes serving the site, and other amenities to increase ridership, utilizing services and programs listed in Exhibit 2.

c. Provide for the design and location of pedestrian and bicycle facilities to maximize transportation access onsite and connecting to adjacent facilities, including onsite bicycle storage facilities to encourage the use of alternative modes of transportation.

d. To the extent that it is cost effective, utilize efficient, low emission vehicles for onsite services like parking enforcement maintenance, and security services, with specific consideration of alternative fuel vehicles.

e. Regularly schedule vacuum sweeping of all parking lots of eleven or more parking spaces.

f. Designate employee parking spaces, conveniently located, for exclusively high occupancy vehicle use for appropriate land uses such as office and medical.

g. Submit with each building permit request a status sheet of trip generation, showing the cumulative trips generated by existing development, development under construction, and development proposed in the building permit application.

h. Submit transit ridership data every 2 years for shuttle service and bus service and consider the ridership in analyzing the number of trips produced by the project during building phases and at buildout.

21. The Applicant agrees to enter into a separate development agreement with the City of Hallandale Beach to address the various impacts that are required to be mitigated for impacts to City services and facilities directly related to the City. In the event of a conflict between this Ordinance and the Development Agreement, the terms and conditions of the Development Agreement shall control.

THE CITY OF HALLANDALE BEACH SHALL:

22. Withhold the issuance of building permits or certificates of occupancy, or both, if the Project Developer fails to meet the requirements of Conditions 1 – 21 and Sections 8, 10 and 13 herein.

23. Withhold the issuance of building permits or certificates of occupancy, or both, if potable water demand and wastewater flows exceed capacity available to serve the project.

24. Prior to the issuance of the first certificate of occupancy for any permanent structure in accordance with the Development Program provided in Condition

6, the City shall ensure that sufficient water treatment and conveyance capacity is available to serve the project.

25. a. Withhold the issuance of the first building permit for any permanent structure in accordance with the Development Program provided in Condition 6, until sufficient wastewater capacity to meet the wastewater flows is made available to serve the project in satisfaction of Condition 4, above.

b. Withhold the issuance of the first certificate of occupancy for any permanent structure in accordance with the Development Program provided in Condition 6, until adequate expansions and improvements to the lift stations and force mains, which are necessary to provide wastewater service to serve the project, have been completed in satisfaction of Condition 4 above.

26. Withhold issuance of the first residential building permit until the Developer has filed a Declaration of Restrictive Covenant that provides for enforcement of its commitment to provide additional mitigation of $2,000,000 to the School Board of Broward County for school improvements.

27. Withhold issuance of the certificate of occupancy for the first residential unit until the Developer has entered into a tri-party agreement with the School Board of Broward and City of Hallandale Beach to specify how the additional $2,000,000 will be utilized.

28. Review project landscape plans to ensure that only those plant species identified in the applicable codes of the City of Hallandale Beach are used for project landscaping and that xeriscape principles are utilized in such landscape plans, as practicable.

29. Monitor site development to ensure that invasive exotic plant species are removed and the property maintained to prevent the re-establishment of invasive exotic species.

30. Withhold the issuance of building permits or certificates of occupancy for any use that will have a significant hazardous materials generation/usage impact as defined in Rule 9J-2044(2)(f) and (5)(a) of the Florida Administrative Code until the submittal of an HMMP in accordance with Condition 8.

31. In the event the Applicant, its successors, or assigns violate any of the conditions of the Development Order or otherwise fails to act in substantial compliance with the Development Order (those parties hereinafter "violator"), the City shall stay the effectiveness of the Development Order as to the tract, or portion of the tract, in which the violation or conduct has occurred and withhold further permits, approvals, and services for development in said tract, or portion of the tract, upon passage of any appropriate resolution by the City, adopted in accordance with this paragraph, finding that such violation has occurred. The violator will be given written notice by the City that states: 1) the nature of the purported violation and 2) that unless the violation is cured within 15 days of said notice, the City will hold a public hearing to consider the matter within 30 days of the date of said notice.

32. If the violation is not curable in 15 days, the violator's diligent good faith efforts to cure the violation within that period will obviate the need to hold a public hearing and the Development Order will remain in effect unless the violator does not diligently pursue the curative action to completion within a reasonable time, in which event the City will give 15 days' notice to the violator of its intention to stay the effectiveness of the Development Order and withhold further permits, approvals, and services as to the tract, or portion of the tract, in which the violation has occurred and until the violation is cured. For purposes of this paragraph, the word "tract" shall be defined to mean any area of development identified on the Village at Gulfstream Park DRI Property, legally described in Exhibit A. In addition, the phrase "portion of a tract" means a division of a tract into more than one ownership as created by deed or plat.

33. The lessees of tracts or portions of tracts within the DRI Property from the Applicant shall not be considered successors of the Applicant for the purpose of affirmative compliance hereunder, including but not limited to all obligations for notification, execution of utility agreements and reporting requirements. Compliance by a lessee as to its tract or portion of tract shall be considered compliance by the Applicant. However, nothing herein shall be construed to limit the obligation of the Applicant to ensure compliance with this Development Order.

SECTION 5. MONITORING OFFICIAL.

The City Manager for the City of Hallandale Beach or his designee (the "City Manager") shall be the local official responsible for monitoring compliance with this Development Order. In carrying out this responsibility, the City Manager shall review and approve all applications for development permits for compliance with the terms and conditions of this Development Order. The City Manager shall have the authority to temporarily suspend this Development Order and withhold future development permits upon notification and verification of a violation of any condition herein in accordance with Section 4, Conditions 31 and 32 of this Development Order.

Upon the written request of the owner(s) or developers of the property or tract, the City Monitoring Official shall certify in writing to the owner(s), developers, mortgagees, and potential mortgagees or other designees of the above, the compliance status of the conditions of this Development Order relative to the stated property or tract. If all conditions of this Development Order are being satisfied or are otherwise in compliance, the certification shall provide that the Development Order is in full compliance. If all conditions are not being complied with, the City Monitoring Official shall specify in writing the conditions with which the owners or developers are not in compliance.

SECTION 6. ELECTION REGARDING ENVIRONMENTAL RULES.

In accordance with Section 380.06(5)(c), Florida Statutes (2006), the Developer has elected to be bound by the rules adopted pursuant to chapters 373 and 403 in effect when as of the date of this Development Order. Such rules shall be applicable to all applications for permits pursuant to those Chapters which are necessary for and consistent with the development authorized in this Development Order, except that a later adopted rule by the appropriate state agencies shall be applicable to an application if:

1. The later adopted rule is determined by the rule-adopting agency to be essential to the public health, safety, or welfare;

2. The later adopted rule is adopted pursuant to s. 403.061(27) which provides for the identification and regulation of "Outstanding Florida Waters";

3. The later adopted rule is being adopted pursuant to a subsequently enacted statutorily mandated program;

4. The later adopted rule is mandated in order for the state to maintain delegation of a federal program; or

5. The later adopted rule is required by state or federal law

SECTION 7. DOWNZONING PROTECTION.

In accordance with Section 380.06(15), Florida Statutes (2006), the Village at Gulfstream Park DRI as approved in this Development Order shall not be subject to downzoning, unit density reduction, or intensity reduction before December 31, 2019, unless the Developer consents to such change or the City of Hallandale Beach demonstrates that substantial changes in the conditions underlying the approval of this Development Order have occurred or that the Development Order was based on substantially inaccurate information provided by the Applicant, or that the change is clearly established by the City of Hallandale Beach to be essential to the public health, safety and welfare.

SECTION 8. BIENNIAL REPORTING.

The Applicant shall prepare a biennial report for the Village at Gulfstream Park DRI in accordance with 380.06(15) and (18), Florida Statutes (2006). The biennial report shall be distributed to the South Florida Regional Planning Council, the Department of Community Affairs, Florida Department of Transportation (District 4 and District 6), the City of Hallandale Beach and Broward County EPD, no later than March 1 of every other year until buildout, commencing March 1, 2008. If the City of Hallandale Beach does not receive the report or receives notification that the SFRPC, DCA or Broward County has not received the report, the City of Hallandale Beach shall request in writing that the Developer submit the report within 30 days. The City Manager shall temporarily suspend the Development Order if the developer fails to submit the report within 30 days of such notification. The biennial report shall include the following:

1. Any changes in the plan of development, or in the representations contained in the Application for Development Approval, or in the phasing for the reporting year and for the next year.

2. A summary comparison of development activity proposed and actually conducted since the previous monitoring report and activity projected for that period until submittal of the next regular monitoring report. The summary will include a description of site improvements, gross floor area constructed by land use type, location and phase, with appropriate maps.

3. Identification of undeveloped tracts of land, other than individual single family lots, that have been sold to a separate entity or developer.

4. Identification and intended use of lands purchased, leased or optioned by the developer adjacent to the original DRI site since the Development Order was issued;

5. A specific assessment of the Developer's and the City of Hallandale Beach's compliance with each individual condition of approval contained in the Development Order and the commitments which are contained in the Application for Development Approval and which have been identified by the City, the Regional Planning Council or the Department of Community Affairs as being significant.

6. Any known incremental DRI applications for development approval or requests for a substantial deviation determination that were filed in the reporting year and to be filed during the next year.

7. An indication of a change, if any, in local government jurisdiction for any portion of the development since the Development Order was issued.

8. A listing of any significant local, state and federal permits which were obtained, applied for or denied during this reporting period, specifying the agency, type of permit, parcel, location(s) and activity for each permit.

9. A statement that all persons have been sent copies of the biennial report in conformance with subsections 380.06(15) and (18), Florida Statutes.

10. A copy of any recorded notice of the adoption of a development order or the subsequent modification of an adopted development order that was recorded by the developer pursuant to paragraph 380.06(15)(f), Florida Statutes.

11. If no additional development pursuant to the Development Order has occurred since the submission of the previous report, then a letter from the Developer stating that no development has occurred shall satisfy the requirement for the biennial report.

12. A complete response to each question in Exhibit 1 and Condition 7.

SECTION 9. <u>BUILDOUT AND EXPIRATION OF THE DRI.</u>

1. The buildout date for the Village at Gulfstream Park DRI project shall be December 31, 2014.

2. December 31, 2019 is hereby established as the expiration date for this Development Order.

SECTION 10. INCORPORATION OF THE ADA.

1. The Applicant shall integrate all original and supplemental ADA information into a Consolidated Application for Development Approval (CADA) that reflects the approved development program, and submit two copies of the CADA to the SFRPC, one copy each to the City of Hallandale Beach and one copy to the DCA within 30 days of the effective date of the Development Order. The CADA shall be prepared as follows:

a. Where new, clarified, or revised information was prepared subsequent to submittal of the ADA but prior to issuance of the Development Order, whether in response to a formal statement of information needed or otherwise, the original pages of the ADA will be replaced with revised pages.

b. Revised pages will have a "Page Number (R) – Date" notation with "Page Number" being the number of the original page, "(R)" indicating that the page was revised, and "Date" stating the date of the revision.

2. Pursuant to Rule 9J-2.025, Section (3)(b)9, F.A.C., the Consolidated Application for Development Approval (as prepared pursuant to Section 10, herein) and the SFRPC DRI Assessment Report are incorporated herein by reference and relied upon by the parties in discharging their statutory duties under Chapter 380, F.S., and local ordinances. Substantial compliance with the representations contained in the ADA is a condition for approval unless waived or modified by agreement among the local governments of jurisdiction, the SFRPC and the Applicant, their successors, or assigns.

SECTION 11. RENDITION.

Within thirty (30) days of the adoption of this Development Order by the City of Hallandale Beach City Commission, the City of Hallandale Beach shall render a copy of this Development Order certified as complete and accurate, by certified mail, return receipt requested, to the Florida Department of Community Affairs, the South Florida Regional Planning Council and the Developer in accordance with 9J2-2.025(5), Florida Administrative Code.

SECTION 12. EFFECTIVE DATE.

This Development Order shall take effect upon the effective date of the City of Hallandale Beach Comprehensive Plan amendments creating the Local Activity Center (LAC) future land use category and designating the Property as the LAC use; the adoption of the appropriate zoning district under the City Codes.

SECTION 13. RECORDATION OF DEVELOPMENT ORDER.

Within thirty days of the Effective Date, the Developer shall record this Development Order and any subsequent amendments with the Clerk of the Circuit Court for Broward County in accordance with Sections 28.22 and 380.06(15)(f), Florida Statutes (2006).

SECTION 14. BINDING EFFECT.

This Development Order shall run with the land and bind the successors and assigns of the Owner and Developer of the DRI Property.

PASSED AND ADOPTED on first reading on September 19, 2006.

PASSED AND ADOPTED on second reading on November 6, 2006.

ATTEST:

MAYOR -COMMISSIONER

CITY CLERK

| | VOTE AYE / NAY |
|---|---|
| Mayor Cooper | ✓ / |
| Vice-Mayor Julian | / ✓ |
| Comm. Gibbons | ✓ / |
| Comm. Ross | ✓ / |
| Comm. Schiller | ✓ / |

CITY OF HALLANDALE
CITY CLERK
06 NOV 22 PM 12:56

LAND DESCRIPTION

VILLAGE AT GULPSTREAM PARK

EXHIBIT "A"

A portion of Lots 1, 3 and 4, Block 7, Lots 1 through 4, Block 10, and Lots 1 through 3, Block 15 all in MAP OF THE TOWN OF HALLANDALE, according to the plat thereof as recorded in Plat Book B, Page 13 of the Public Records of Dade County, Florida, also being portions of HALLANDALE PARK NO. 12, PART 2, according to the plat thereof as recoded in Plat Book 10, Page 17, portions of HOLLYDALE PARK, according to the plat thereof as recorded in Plat Book 11, Page 2 and portions of HALLANDALE PARK NO. 12, according to the plat thereof as recorded in Plat Book 12, Page 35, the three (3) previous plats being recorded in the Public Records of Broward County Florida and being particularly described as follows:

COMMENCING at the Southeast corner of Section 27, Township 51 South, Range 42 East, Broward County, Florida;

THENCE South 88°01 '22" West on the South line of said Section 27, a distance of 2,093.59 feet to the POINT OF BEGINNING;

THENCE continue South 88°0122 West on said South line of Section 27, a distance of 570.55 feet to the Intersection with the East right-of-way line of South Federal Highway (U.S. 1) as shown on State of Florida Department of Transportation Right-of-Way Maps for State Road 5, Section 86010-2519, said point located on the arc of a non-tangent curve concave to the West, whose radius point bears North 79°45'42" West;

THENCE on said East tight-of-way line of South Federal Highway (U.S. 1) the following sixteen courses and distances;

1. Northerly on the arc of said curve having a radius of 3,909.83 feet; through a central angle of 05°16'33", and an arc distance of 360.01 feet to a point of non-tangency;
2. South 85°02'14" East, a distance of 0.85 feet;
3. North 07°51'26" East, a distance of 99.85 feet to a point on the arc of a non-tangent curve concave to the West, whose radius point bears North 86°49'11" West;

Prepared By

CALVIN, GLORDANO AND ASSOCIATES, INC.

1800 Eller Drive suite 600

Fort Lauderdale, Florida 33316

July 6, 2005

Revised August 3, 2005

Rev September 26, 2005

4. Northerly on the arc of said curve having a radius of 3,743.00 feet, through a central angle of 05°00'35", and an arc distance of 327.27 feet to a point of tangency;

5. North 01°49'46" West, a distance of 32.91 feet;

6. South 88°10'14" West, a distance of 4.50 feet to a point on the arc of a non-tangent curve concave to the West, whose radius point bears South 88° 14'02" West;

7. Northerly on the arc of said curve having a radius of 3,909.83 feet, through a central angle of 00°03'48", an arc distance of 4.32 feet to a point of tangency;

8. North 01°49'46" West, a distance of 1,521.75 feet;

9. North 02°03'07" East, a distance of 67.65 feet;

10. North 01°49'46" West, a distance of 200.25 feet;

11. North 43°07'48" East, a distance of 38.89 feet;

12. North 01°52'33" West, a distance of 106.00 feet;

13. South 88°07'27" West, a distance of 10.97 feet;

14 North 66°56'55" West, a distance of 23.16 feet;

15. North 01°50'08" West, a distance of 555.82 feet;

16. North 33°52'37° East, a distance of 40.03 feet to the intersection with the South right-of- way line of Hibiscus Street as shown on THE PROMENADE AT HALLANDALE, according to the plat thereof as recorded in P1st Book 112, Page 4 of the Public Records of Broward County, Florida;

THENCE North 88°13'39" East on said South right-of-way line and its Easterly projection, a distance of 594.33 feet

THENCE South 01°46'21" East, a distance of 10.00 feet;

---

THENCE North 88°13'39" East, a distance of 110.41 feet;

THENCE South 01°06'17" East, a distance of 29.83 feet;

THENCE South 01°50'08" East, a distance of 414.60 feet;

THENCE North 88°09'52" East, a distance of 277.46 feet;

THENCE South 01°53'41" East, a distance of 1,205.42 feet to a point on the arc of a non-tangent curve concave to the Southeast, whose radius point bears South 08°25'32" East;

THENCE Southwesterly on the arc of said curve having a radius of 59.13 feet, through a central angle of 81°41'52", an arc distance of 84.31 feet to a point of tangency;

THENCE South 00°07'24" East, a distance of 34.90 feet;

THENCE South 88°09'52" West, a distance of 170.01 feet;

THENCE South 01°50'08" East, a distance of 226.96 feet to a point on the arc of a non-tangent curve concave to the East, whose radius point bears South 12°35'36 East;

THENCE Southerly on the arc of said curve having a radius of 116.08 feet, through a central angle of 158°29'04", and an arc distance of 321.09 feet to a point of non-tangency;

THENCE South 01°50'08" East, a distance of 315.49 feet;

THENCE South 88°09'52" West, a distance of 103.71 feet;

THENCE South 43°09'52" West, a distance of 276.44 feet;

---

THENCE South 01°50'08" East, a distance of 618.62 feet to the POINT OF BEGINNING;

Said lands lying in the City of Hallandale Beach, Broward County, Florida and containing 2,646,985 square feet (60.7664 acres), more or less.

Prepared By
CALVIN, GLORDANO AND ASSOCIATES, INC.
1800 Eller Drive suite 600
Fort Lauderdale, Florida 33316
July 6, 2005
Revised August 3, 2005
Rev September 26, 2005

NOTES:

1. Not valid without the signature and original embossed seal of a Florida licensed Professional Surveyor and Mapper.
2. Lands described hereon were not abstracted, by the surveyor, for ownership, easements, rights-of-way or other instruments that may appear in the Public Records of l3roward County.
3. Bearings shown hereon are relative to the South line of the SE ¼ of Section 27-51-42 having a bearing of South 88°01'22" West.
4. The description contained herein and the attached sketch, do not represent a field Boundary Survey.

---

Prepared By
CALVIN, GLORDANO AND ASSOCIATES, INC.
1800 Eller Drive suite 600
Fort Lauderdale, Florida 33316
July 6, 2005
Revised August 3, 2005
Rev September 26, 2005

EXHIBIT 1
DEVELOPMENT OF REGIONAL IMPACT
BIENNIAL REPORT

Subsection 380.06(18), Florida Statutes, (F.S.) places the responsibility on the developer of an approved development of regional impact (DRI) for submitting a biennial report to the local government, the regional planning agency, the Department of Community Affairs, and to all affected permit agencies, on the date specified in the development order. The failure of a developer to submit the report on the date specified in the development order may result in the temporary suspension of the development order by the local government until the biennial report is submitted to the review agencies. This requirement applies to all developments of regional impact which have been approved since August 6, 1980. If you have any questions about this required report, call the DRI Planner at (850) 488-4925.

Send the original completed biennial report to the designated local government official stated in the development order with one copy to each of the following:

a) The regional planning agency of jurisdiction (along with the required $250 review fee);

b) All affected permitting agencies (particularly the County and FDOT)

c) Division of Resource Planning and Management
Bureau of Local Planning
2555 Shumard Oak Blvd.
Tallahassee, Florida 32399
850/488-4925

# BIENNIAL STATUS REPORT

Reporting Period: _____ to _____
Month/Day/Year Month/Day/Year

Development: _____
Name of DRI

Location: _____
City County

Developer: Name: _____
Company Name

Address: _____
Street Location

_____
City, State, Zip

1. Describe any changes made in the proposed plan of development, phasing, or in the representations contained in the Application for Development Approval since the Development of Regional Impact received approval. Note any actions (substantial deviation determinations) taken by local government to address these changes.

   Note: If a response is to be more than one sentence, attach as Exhibit A a detailed description of each change and copies of the modified site plan drawings. Exhibit A should also address the following additional items if applicable:

   a. Describe changes in the plan of development or phasing for the reporting year and for the subsequent years;

   b. State any known incremental DRI applications for development approval or requests for a substantial deviation determination that were filed in the reporting year and to be filed during the next year;

   c. Attach a copy of any notice of the adoption of a development order or the subsequent modification of an adopted development order that was recorded by the developer pursuant to Paragraph 380.06(15)(f), F.S.

2. Has there been a change in local government jurisdiction for any portion of the development since the development order was issued? If so, has the annexing local government adopted a new DRI development order for the project? Provide a copy of the order adopted by the annexing local government.

3. Provide copies of any revised master plans, incremental site plans, etc., not previously submitted.

Note: If a response is to be more than one or two sentences, attach as Exhibit B.

4. Provide a summary comparison of development activity proposed and actually conducted for the reporting year as well as a cumulative total of development proposed and actually conducted to date.

Example: Number of dwelling units constructed, site improvements, lots sold, acres mined, gross floor area constructed, barrels of storage capacity completed, permits obtained, etc.

Note: If a response is to be more than one sentence, attach as Exhibit C.

5. Have any undeveloped tracts of land in the development (other than individual single-family lots) been sold to a separate entity or developer? If so, identify tract, its size, and the buyer. Provide maps which show the tracts involved.

Buyer _____ Tract _____

Note: If a response is to be more than one sentence, attach as Exhibit D.

6. Describe any lands purchased or optioned adjacent to the original DRI site subsequent to issuance of the development order. Identify such land, its size, and intended use on a site plan and map.

Note: If a response is to be more than one sentence, attach as Exhibit E.

7. List any substantial local, state and federal permits which have been obtained, applied for, or denied during this reporting period. Specify the agency, type of permit, and duty for each.

Note: If a response is to be more than one sentence, attach as Exhibit F.

8. Provide a list specifying each development order conditions and each developer commitment as continued in the ADA land sale how and when each condition or commitment has been complied with during the biennial report reporting period.

Note: Attach as Exhibit G.

9. Provide any information that is specifically required by the development order to be included in the biennial report.

10. Provide a statement certifying that all persons have sent copies of the biennial report in conformance with Subsections 380.0(15) and (18), F.S.

Person completing the questionnaire: _____

Title: _____

Representing: _____

EXHIBIT 2
TRANSPORTATION DEMAND MANAGEMENT
VILLAGE AT GULFSTREAM PARK
DEVELOPMENT ORDER CONDITIONS

## TRANSIT/TRANSPORTATION DEMAND MANAGEMENT PROGRAM

### 1. INTRODUCTION

Condition _____ from Ordinance _____ requires the preparation and submittal of a Transit/Travel Demand Management (TDM) Program by the owners/operators of the Village at Gulfstream Park DRI. The TDM Program has been prepared to implement the viable strategies set forth and evaluated in the DRI as part of the response to Question-21 *Transportation.* These TDM strategies and programs contain both optional as well as mandatory programs to promote transit and TDM strategies to reduce traffic congestion during the traditional peak travel hours.

### 2. CONDITION

As a condition of the Development Order, the Applicant will submit to the City Hallandale Beach, Broward County Mass Transit Division and Florida Department of Transportation District 4 (FDOT) a Transit/Transportation Demand Management ("TDM") Program for the Village at Gulfstream Park DRI. The TDM plan shall be appropriate to the size, scale and location of the proposed use and shall demonstrate that reasonable and practicable actions will be taken in conjunction with and over the life of the use that will produce a reduction in the traffic and related impacts of the use. The TDM program developed by the Village at Gulfstream Park shall include a biennial TDM status report, and promote or commit to one or more of the following:

1. A mixed-use development program which will encourage multi-purpose trips. Retail, entertainment, restaurant and other uses will provide commuter assistance to employees.
2. A fully accessible internal pedestrian access system which will connect all uses directly to a major transit facility.
3. The transit facility will provide a number of amenities which will encourage bicycle, pedestrian and transit usage.

4. A parking supply and layout that will encourage multi-purpose trips.

5. On-site management staff will promote and/or coordinate ridesharing and/or vanpooling services as well as disseminate information on transit operations and other priority parking for carpools and/or vanpools and emergency ride home services.

6. On-site Management will disseminate transit passes for employees who wish to use transit.

7. Shuttle service to and from the nearest Tri-Rail stations north and south of the site shall be provided in a manner that is consistent with encouraging transit usage and reasonably usable by employees. Service quality and quantity shall be monitored and reported. Coordination with the SFRTA for station access and promotion of ridership will be required.

8. Management staff will provide a liaison with South Florida Commuter Services to develop and maintain an effective TDM Program.

9. Connections will be made to the bicycle lanes on adjacent streets and bicycle racks will be provided on-site for bicycle storage.

EXHIBIT 3
VILLAGE AT GULFSTREAM PARK
DEVELOPMENT ORDER CONDITIONS

GROUP A- TRANSPORTATION IMPROVEMENTS

1. Intersection modifications at Hallandale Beach Boulevard & NB/SE 1st Avenue and Hallandale Beach Boulevard & Dixie Highway to create single point intersection, or install an alternative geometric configuration accepted by the City, Florida Department of Transportation (FDOT) and Broward County that eliminates split-phase signal operation on Hallandale Beach Boulevard.
2. Signal interconnection on Hallandale Beach Boulevard corridor from I-95 to State Road A1A as designed in the Broward County Advanced Transportation Management System Communications Design and Deployment Project (Phase 4). This shall include the following elements:
   - Lightning protection, grounding and surge protection system
   - Fiber optic cable
   - Repairs and replacement to conduit, as necessary
   - Pull boxes
   - Switches
   - Cabinet and controller equipment modifications, as necessary
   - CCTV equipment, assemblies and poles
   - Video encoders
3. Signal-controlled westbound dual right-turn movement onto the northbound I-95 ramps at Hallandale Beach Boulevard, subject to permit approval from FDOT. In the event that this improvement is not deemed feasible or is otherwise not permitted by FDOT, Applicant shall install a westbound right turn signal at the intersection of Hallandale Beach Boulevard and I-95 or implement a similar improvement subject to permit approval by FDOT.

GROUP B- SITE RELATED IMPROVEMENTS

1. New traffic signal, dual southbound left turn lanes and northbound right turn lane at US 1 and 9th Street, subject to permit approval from FDOT.
2. Median access closure at US 1 and 7th Street subject to permit approval from FDOT.
3. Super Stop along the east side of US 1 south and/or north of 5th Street subject to approval from the authorizing agencies including, but not limited to, the Broward County Mass Transit Division and after consultation as to design and location with FDOT District IV and Miami-Dade County Transit Division, with full array of the following amenities:
   - Transit route and system signs
   - Specialty paving
   - Passenger shelters
   - System Map/Fare Information
   - Route Map and Schedules
   - Benches
   - Leaning Rails
   - Trash Receptacles
   - Restroom for bus operators
   - Landscaping
   - Emergency Telephones
   - Lighting
   - Bicycle Storage
   - Information Kiosks
   - Bus Bays
   - Drinking Fountain

4. Establishment and implementation a pedestrian crossing plan in all directions at 5th Street and US 1 to serve the transit Super Stop.
5. Minimization of intersection width at US 1 and 5th Street by not providing exclusive northbound right turn lane on US 1 at the site entrance.
6. Adjustment to queue storage for northbound left turning vehicles at Hallandale Beach Boulevard and U.S. 1 by closing current channelized opening at S.E. 2nd Street and extending dual northbound left turn lanes, subject to approval from City of Hallandale Beach and permit approval from FDOT.
7. Provision of full-time access to the site at entrances along Hallandale Beach Boulevard and along U.S. 1.
8. Provision of multiple full-time access points along site perimeter and provide connectivity within the site to minimize the need for cars to make turning movements at Hallandale Beach Boulevard and US 1.
9. There shall be no vehicular access connection, except for emergency access as required by government between the Project and N.E. 213th Street within the City of Aventura. Vehicular access to N.E. 213th Street may be allowed only if and after the Developer, City of Hallandale Beach and the City of Aventura, by Resolution of the City Commission, in each party's sole discretion, mutually agree in writing to allow such access and providing the specific location of said access drive.

Group C- TRANSIT AND OTHER IMPROVEMENTS

1. Applicant shall post surety to the benefit of the South Florida Regional Transportation Authority and Broward County in the amount of $3.0 million. The benefit of this surety shall be directed towards the establishment of a North/South rail station to be located in a general area that includes Pembroke Road to the north and the Broward/Miami-Dade County line to the south, pending approval from the appropriate review agencies. If no binding commitment for a rail station is achieved within 24 months from posting of the surety, this posted surety is transferred to Broward County, to be used on any or all of the following bus transit projects outlined in 1 (a) - (c) below, or any similar programmed transit improvements serving the City of Hallandale Beach
   a) Implementation of new Limited Stop Service on U.S. 1
   b) Implementation of high capacity service on Hallandale Beach Boulevard
   c) Reduction in weekday headways on Route 28 from 30 minutes to 20 minutes
   d) Reduction in weekday headways on Route 5 from 60 minutes to 30 minutes
2. Until such time as a new rail station is constructed, or until the buildout date as defined in Condition 38 of this Development Order, whichever comes first, the Applicant shall provide shuttle service between the Hollywood Tri-Rail station to and from the site using a minimum of two vehicles, each operating a minimum of 8 hours per weekday.
3. Participate in charrette for Hallandale Beach and Hallandale Beach CRA to address redevelopment potential and connectivity between the Village at Gulfstream Park Site, the FEC corridor, and the City of Hallandale Beach CRA.
4. Provide payment of $300,000.00 to the Florida Department of Transportation, District 6, for the construction of ramp improvements at the interchange of I-95 and Ives Dairy Road for payment of the proportionate share of the project's impacts at Ives Dairy Road & I-95.
5. Provide payment of $250,000.00 to the City of Hollywood towards transportation improvements including, but not limited to traffic calming measures in the area bounded by Pembroke Road, Diplomat Parkway, Hollywood Boulevard and I-95, contingent upon an adopted plan to be developed and implemented by the City of Hollywood.
6. Provision of offsite parking for a minimum of 500 project employees at an off-site location or locations with transit service planned to be in place through the buildout phase of this DRI project, agreed upon for such use by the Applicant, Broward County and the City of Hallandale Beach.

EXHIBIT 4
VILLAGE AT GULFSTREAM PARK DRI
DEVELOPMENT ORDER CONDITIONS

SITE RELATED ACCESS POINTS:

1. Hallandale Beach Blvd. and north project driveway- existing full access signalized
2. US 1 and 3rd Street- existing full-access signalized
3. US 1 and 5th- proposed SB Left-in, NB right-out from the site
4. US1 and 7th Street- existing directional (NB-only right-out from site) access point.
5. US 1 and 9th Street- existing directional access point; proposed full-access signalized access point.
6. US 1 and 11th Street- existing right-in/right out access point proposed directional access point.

EXHIBIT 5
Section 32-639, City of Hallandale Beach Code of Ordinances

Sec. 32-639. Garbage collection by city; private haulers; permit required.

(a) *Generally.* All garbage which is produced in the city shall be collected, conveyed and disposed of by the city except as provided in this section. No person shall collect or convey over any of the streets or alleys in the city any garbage produced in the city, without a hauling permit or disposal permit, as applicable, issued pursuant to this division. The issuance of such hauling permit shall be based solely on the factors set forth in subsection (e) of this section and in the case both of hauling permits and disposal permits on the inability or refusal of the city to provide service as the circumstances may require. Renewal of existing hauling permits shall be based upon compliance with the factors set out in subsections (e) and (f) of this section. Persons who are presently served by the holder of a hauling permit may obtain a disposal permit notwithstanding the present ability of the city to serve that account.

(b) *Frequency of pickups.* Days, hours and frequency of garbage pickups are in the sole discretion of the city manager. Restaurants and other establishments serving food for immediate consumption on or off the premises shall have garbage collection at least four times per week or as otherwise authorized by the city manager. Other nonresidential customers shall have garbage collection at least one time per week.

(c) *Prior placement.* No garbage, trash or bulk items to be collected by a private hauler shall be placed on the right-of-way for a period longer than 24 hours prior to collection. (d) *Collection by private contractor.* No person shall collect, convey or dispose of any garbage accumulated in the city without first having obtained a permit from the city manager. A permit shall be issued only upon the criteria set forth:

(e) *Permit required.* Any person who wishes to obtain a permit to collect, convey or dispose of any garbage accumulated in the city must first make application to the city manager. The application shall include a cashier's check or certified check in the amount established for such permit and the established application fee for the permit. Each applicant shall submit in writing a list of its qualifications for a garbage permit. Such list shall include the following:

(1) Evidence of adequate number of trucks to provide service, and backup level to properly service the number of customer accounts applied for.

(2) Certification of proper and adequate insurance coverage of not less than $500,000.00 public liability insurance.

(3) Evidence of sufficient maintenance ability to meet the service needs of the number of trucks and equipment to be used by the permittee.

(4) Demonstration that a business office with a toll free telephone number will be operated to provide adequate response to customer inquiries or complaints. The office address shall be provided.

(5) Agreement that hours of service will be limited to the hours of 7:00 a.m. to 8:00 p.m. (6) Agreement that all pickup of food and other putrescents from commercial establishments shall be at least four times a week, regardless of the size of the container.

(7) Agreement that service will not be discontinued unless written notice is delivered to the address receiving the service ten days prior to the discontinuance of service, with a copy of the notice being sent at the same time to the city manager.

(8) Name, address and telephone number of the person to be contacted by city with reference to the operation of this section.

(9) Names and addresses of the owners of the company making the application. If the applicant is a corporation, this includes a list of all officers and directors. If the applicant is a partnership, this includes a list of all partners.

(10) The applicant shall provide a list of all felony convictions within the past ten years in federal court, or the court of any state for violation of antitrust, anticompetitive, racketeering or fraudulent practices laws with a brief description of the circumstances. This subsection also applies to all individuals listed in subsection (e)(9) of this section.

(11) The applicant shall list any and all cities and counties from which the applicant or the principals have involuntarily withdrawn service during the five-year period immediately preceding the date of the application. The applicant shall also list any and all franchises issued to the applicant which have been suspended or revoked for the five-year period immediately preceding the date of the application with a brief description of the reason for such withdrawal.

(f) *Issuance of hauling permit.*

(1) In determining whether to issue a hauling permit, the city manager shall consider the information provided by the applicant under subsection (e) of this section. The city manager shall determine, based on these criteria, whether the applicant has sufficient experience, ability, integrity and expertise to allow the applicant to successfully operate within the city in accord with all applicable laws and regulations. In analyzing the information provided in subsection (e)(10) and (11) of this section, the city manager shall consider the number and seriousness of the specific incidents listed.

(2) The minimum fee for a permit shall be payable in advance on or before October 1 of each year; provided that if more is due for the quarter commencing October 1 based on the cubic yards of available container capacity, such greater amount shall be paid. All permits shall expire each September 30. However, if a permit is granted for a period of less than six months, the minimum fee shall be half the established annual permit fee in addition to the application fee. A renewal application and an application fee is required each year. Such fee shall be payable on a quarterly basis in advance within 30 days of the beginning of each quarter, and the minimum fee due under this subsection shall be credited against the fee collected on a per-cubic-yard basis as reported to the city by the hauler in accordance with subsection (f)(5) of this section. Failure to timely provide information required under subsection (f)(5) of this section or to remit the fee required under this subsection (f)(2) shall be cause for revocation of any issued hauling permit and a violation of this Code punishable as provided in section 1-8.

(3) All changes in customer accounts, whether additions or deletions, shall be reported in writing to the city manager within five days of such change, including giving the name of such customer and the disposal permit number of such customer.

(4) a. The city manager is authorized to designate a disposal facility named in any interlocal or private waste disposal agreement entered into by the city, and to require holders of hauling permits to dispose of waste, recyclables and other materials of a similar nature at such location. Failure by a private hauling permit holder to dispose of waste, recyclables and other materials of a similar nature at such location shall be a violation of this Code, punishable as provided in section 1-8, and shall be cause for revocation of the violator's hauling permit.

b. Private haulers that do not deliver all solid waste collected in the city or the established quota of solid waste to the city's designated disposal facility are required to pay an equalization fee for any shortfall if the city is charged a shortfall fee by the facility. The fee may be reduced by a prorated percentage among haulers so that the equalization fees equal but do not exceed the city's shortfall charge.

c. The fee is due and payable within 30 days of invoice by the city. The failure to pay the equalization fee, as calculated by the city, shall be cause for revocation of the private hauler's permit.

(5) It shall be a condition of issuance or renewal of any hauling permit that the holder of such hauling permit shall report to the city on a quarterly basis at or before a date fixed by the city manager, the bulk tonnage of all materials originating within the city, conveyed, transported or disposed of by such private hauler and the following information about individual customers served by the hauler within the city:

a. Location of service.

b. Number, size and type of containers provided.
c. Frequency and days of week service is provided.
d. Duration of contract.
e. Name and address of each account.

This requirement shall also apply to persons currently holding a hauling permit, and it shall be deemed unlawful and a violation of this Code to fail to timely make the required report.

(6) All permitted private haulers conveying, transporting and disposing of newspapers, cardboard, paper, aluminum and similar materials suitable for recycling are required to conform to the requirements of subsection (f)(4) and (5) of this section. The exemptions provided for in section 32-647 do not relieve haulers from the requirements of subsection (f)(5) of this section.

(g) *Appeal to city commission upon denial of permit; retention of application fee.*

(1) Any person who applied for a permit for garbage collection and is refused such a permit may appeal directly to the city commission for a review of the decision of the city manager.

(2) This appeal shall be forwarded in writing to the city manager for placement on the commission agenda.

(3) If a permit application is denied and no appeal is taken under subsection (g)(1) of this section or if the city commission upholds the city manager's denial of a permit, the city manager shall refund the money submitted under subsection (e) of this section less the application fee.

(h) *Revocation of permit.* Should any person who holds a permit for garbage collection violate any of the provisions of the Code of Ordinances, or fail to do a required act of the Code of Ordinances, and should the city manager determine that a permittee is operating in a manner harmful to the health, safety or welfare of the citizens of the city, based upon the requirements of subsections (e) and (f) of this section, or in violation of such requirements, he may revoke the permit for collection of refuse after a hearing.

(1) Any revocation shall not be effective sooner than three days from the date of mailing and shall not be effective if the permittee requests a hearing within five days of that date. (2) The permittee shall be given at least seven days' notice of the time, date and place of a hearing to be held by the city manager or his designee. The notice shall state the charges or violations to be heard and shall be held in accordance with due process of law.

(3) At the conclusion of the hearing, the city manager may affirm the revocation or specify such compliance as may be necessary for compliance with this Code or applicable law.

(4) The decision of the city manager may be appealed to the city commission by the permittee's filing of a written request for hearing within ten days of the decision with the city clerk.

(5) Upon hearing, the city commission may affirm, modify or reverse the decision of the city manager.

(i) *Disposal permits.*

(1) The owner, tenant, occupant, or his agent, of the premises upon or from which such garbage is produced who desires to have such garbage collected, conveyed or disposed of by a hauling permit holder shall apply to the city manager for a disposal permit upon forms to be supplied by the city manager and shall pay an annual fee. Such application shall specify the nature of the garbage the applicant will dispose. The disposal permit provided in this subsection shall be nontransferable. It shall be unlawful for any person to offer garbage for collection, conveyance or disposal to any person other than the city unless the owner, tenant or occupant of the premises upon or from which such garbage is produced has first obtained the disposal permit required in this subsection. It shall also be unlawful for any person other than the city to collect, convey or dispose of garbage produced within the city unless the owner, tenant or occupant of the premises upon or from which such garbage is produced has first obtained the disposal permit required in this subsection. It shall further be deemed a violation of this Code subjecting the holder of a hauling permit to its revocation if such holder services a customer who does not hold a currently valid disposal permit.

(2) Persons served at the effective date of Ordinance No. 87-26 by a private hauler holding a valid hauling permit and occupational license shall obtain the disposal permit provided in this subsection within 90 days of such effective date. The city manager is authorized to promulgate rules and regulations reflecting proof of service by a private hauler at such effective date.

(Code 1980, § 24-5)

## EXHIBIT 6
## ITE 7th Edition Trip Generation Rates

### P.M. Peak Hour Gross Trip Generation Rates

| Land Use | Source | Independent Variable | Rate |
|---|---|---|---|
| Cinema | * | X = seats | T = 0.052 x X (48% in, 52% out) |
| Office | [ITE 710] | X = 1,000 s.f. GFA | T = 1.12(X) + 78.81 (17% in, 83% out) |
| Hotel | [ITE 310] | X = rooms | T = 0.59 * (X) (53% in, 47% out) |
| Residential/ Condos | [ITE 230] | X = dwelling units | Ln(T) = 0.82*Ln(X) +0.32 (67% in, 33% out) |
| Commercial Retail | [ITE 820] | X = 1,000 s.f. GFA | Ln(T) = 0.66*Ln(X)+3.4 (48% in, 52% out) |

Notes:
* Based upon a locally-established rate agreed upon in the original traffic analysis methodology for this ADA

All other trip generation rates are based upon data published by the Institute of Transportation Engineers (ITE) in *Trip Generation, Seventh Edition.*

**DKS** Associates
TRANSPORTATION SOLUTIONS

# MEMORANDUM

**TO:** Will Voegele, Forest City Commercial Group
**FROM:** Jerry Wentzel, P.E.
**DATE:** November 20, 2008
**SUBJECT:** Village at Gulfstream Park -- Parking Recommendations Phase 2

## INTRODUCTION

This memo presents an update of our parking analysis for the Village at Gulfstream Park to reflect the Phase 2 development program. Included are descriptions of key factors, procedures and calculations used in this updated analysis.

The parking recommendations were developed for design day conditions which will occur on a Saturday during the winter racing season. The highest parking hour on that Saturday will occur in the afternoon around 3:00 PM during race/casino activity when the mixed-use development will be busy. Another lower parking peak will occur during the evening around 8:00 PM when the mixed-use development is busiest, but the racetrack parking has subsided.

## DESIGN DAY

A design day is one that occurs frequently enough to justify providing spaces for that level of parking activity. The design day should not be the highest day that is never exceeded, nor should it be an average day that is exceeded 50% of the time. In 1990 a parking committee for the Institute of Transportation Engineers (ITE) recommended the use of the 85$^{th}$ percentile as an appropriate design standard. This standard indicates that parking demand is expected to exceed the parking spaces provided on 15% of the days the development is open. This standard has been adopted by ITE for the 3$^{rd}$ edition of *Parking Generation* and by ULI for the 2$^{nd}$ edition of *Shared Parking*.

## SHARED PARKING

Shared parking is the use of a parking space by a vehicle generated by two or more individual land uses without conflict or encroachment. The ability to share parking spaces is the result of two conditions:

- Variations in the accumulation of vehicles by hour, by day or by season of the individual land uses.
- Relationships among the individual land uses that result in visiting multiple land uses as part of the same auto trip.

When more than 20% of the floor space in a retail development is allocated to restaurants, entertainment facilities or movie theaters, a shared parking analysis should be employed to determine parking space needs because of the higher parking characteristics for these types of uses.

12000 North Dale Mabry Highway
Suite 112
Tampa, FL 33618

(813) 962-59591
(813) 962-5744 fax
www.dksassociates.com

DKS 25 YEARS

## CAPTIVE FACTORS

A captive vehicle trip occurs when a vehicle is generated by more than one land use within a development and is not required to travel on the external roadways to reach these different land uses. To be a captive parker the visits to more than one land-use need to occur simultaneous or within the normal turnover time for the parking space. Otherwise these visits are considered to be consecutive and do not reduce parking space needs. A simultaneous visit occurs when (1) the occupants of one vehicle split up with some going to one land-use (e.g. shopping) and some going to another (e.g. restaurant) or (2) the occupants of one vehicle go to more than one land-use within a relatively short time period. This results in a shared parking space by two land uses. The length of stay is an important consideration in determining captive parking factors.

## PARKING NEEDS CALCULATIONS

The parking needs for the total development were calculated by first determining the needs for the racetrack/casino and mixed-use development separately and then combining the results considering captive parkers. The steps that were followed in performing these calculations are listed and described below:

### Racetrack / Casino

1. Utilize the number of occupied parking spaces that were counted on a peak survey Saturday in 2007 to reflect the 85$^{th}$ percentile Saturday (design day).

   *The selection of the 85$^{th}$ percentile Saturday represents the fifth highest attendance day at the Race Track. This would seem to be a high standard, certainly higher than the overall 85$^{th}$ highest day which is the industry standard.*

2. Separate the number of occupied parking spaces into employee spaces and patron spaces based upon the use of 500 spaces by employees.

   *The estimate of 500 employee spaces was provided by the track operators who have the best knowledge of employee count and their parking characteristics.*

3. Increase the number of occupied spaces to reflect parking space needs for employees (2.5%) and patrons (5%) to provide a safety factor and accommodate parking space turnover.

   *The conversion from occupied spaces to parking needs requires the use of factors to provide some surplus of spaces to ease search time and achieve a safety factor. A surplus of 10% is typically desired for retail patron parking spaces, but that would be excessive for a design day for the racetrack/casino. The 2.5% and 5% factors for racetrack/casino employees and patrons, respectively, are adequate because of the longer duration of time that these vehicles are parked. With their low turnover rates, these spaces are utilized more efficiently. The use of these factors increases parking space needs by 12 spaces for employees and by 203 spaces for patrons.*

4. Account for the addition of 1000 new slot machines that has occurred since the parking survey in 2007.

   *Based upon parking surveys at other existing casinos in Florida, it is estimated that 1000 slot machines generates a need for 600 total parking spaces on Saturday afternoons. Of this total, 150 parking spaces would be for employees. It is estimated that during racing season 20% of the 450 patron parking spaces would be shared with the patrons of the racetrack, thus reducing total parking needs to 510 spaces.*

## Mixed-Use

1. Prepare a shared parking analysis for each land use based upon the most current parking ratios provided by ULI for employees and patrons, using their recommended seasonal, daily and hourly adjustment factors.

   *The seasonal factors used for the mixed-use development represent the highest time period outside of the Christmas shopping period. These parking demands would be expected on busy Saturdays during the winter tourist season in Florida.*

2. Select captive factors for each land-use to account for multi-purpose trips within the mixed-use development using professional judgment and experience.

   *The captive factors were based upon best judgment and ranged between 0% for office space to 20% for restaurants.*

3. Reduce parking space needs for the mixed-use development based upon these captive factors.

   *The analysis results produced a reduction in parking space requirements within the mixed-use development on a Saturday afternoon, primarily resulting from the limited use of the office space on Saturday afternoons. The captive factors between these uses represents a reduction of 120 parking spaces from a total patron demand for 1810 spaces.*

## Total Development

1. Select a captive factor to account for multi-purpose trips between the mixed-use development and the racetrack/casino.

   *A captive factor of 20% was selected, representing that 20% of the patron vehicles destined to the mixed-use development include persons who will also visit the racetrack /casino during their normal duration of stay at the development.*

2. Reduce parking space needs for the total development based upon this captive factor.

   *The 20% captive factor reduces the total parking space needs by 254 spaces at 3:00 PM on a design Saturday.*

DKS Associates
TRANSPORTATION SOLUTIONS

11-20-08

# Village at Gulfstream Park – Phase 2

## Design Hour Parking Calculations

### Design Saturday @ 3:00 PM

## Racetrack / Casino

**2007 Survey Saturday**

**Peak Spaces Occupied**
4550 @ 3:00 PM

| | Employee | Patron | Total | | Patron Shared | Total Needed |
|---|---|---|---|---|---|---|
| Parking Spaces Occupied | 500 | 4050 | 4550 | | | |
| **Parking Spaces Needed** | **512** | **4253** | **4765** | | | **4765** |
| 1000 New Slot Machines<br>**Spaces Needed @ 3:00 PM** | **150** | **450** | **600** | - | **90** | **510** |
| **Total Parking Spaces Needed** | **662** | **4703** | **5365** | - | **90** | **5275** |

## Mixed-Use (Phase 2)

**Design Saturday**

**Spaces Needed @ 3:00 PM**

| Land-Use | Area | Employee | Patron | Total |
|---|---|---|---|---|
| Retail | 244,783 sf | 176 | 580 | 756 |
| Furnishings | 72,478 sf | 39 | 129 | 168 |
| Restaurant | 82,476 sf | 186 | 562 | 748 |
| Office | 81,524 sf | 15 | 2 | 17 |
| Night Clubs | 10,000 sf | 2 | 0 | 2 |
| **Totals** | | **418** | **1273** | **1691** |

## Phase 2 Development with Racetrack/Casino (1500 slot machines)

**Design Saturday**

**Spaces Needed @ 3:00 PM**

| | Employee | Patron | Total | | Patron Shared | | Total Needed |
|---|---|---|---|---|---|---|---|
| Race Track/Casino | 662 | 4703 | 5365 | - | 90 | | 5275 |
| Mixed-Use | 418 | 1273 | 1691 | - | 254 | | 1437 |
| **TOTAL** | **1080** | **5976** | **7056** | - | **344** | = | **6712** |

Kimley-Horn
and Associates, Inc.

***Memorandum***

4431 Embarcadero Drive
West Palm Beach, Florida
33407

To: Richard Cannone

From: Christopher W. Heggen, P.E.

Date: November 20, 2008
Revised December 5, 2008

Re: Village at Gulfstream Park DRI
Air Quality License for Site Parking Facilities
KHA # 042250000

---

The application for Major Development Permit (MDP) approval for Phase 2 of the Village at Gulfstream Park DRI includes the following uses and intensities of development on site:

- 244,783 square feet of commercial retail use
- 72,478 square feet of furniture store use
- 82,476 square feet of restaurant use
- 81,524 square feet of office use
- 10,000 square feet of nightclub use

The total parking required on site, as documented in the memorandum from DKS Associates, Inc. dated November 20, 2008, is 6,712 spaces. As shown on the current site plan for Phase 2, a total of 7,121 parking spaces are provided. Of these, 6,097 parking spaces are to be provided at-grade in surface parking lots and 1,024 are proposed to be provided in a parking structure on site.

On February 5, 2008, the Broward County Environmental Protection Department issued an Air Quality License allowing 7,500 parking spaces on site, with 6,505 surface parking spaces and 995 parking spaces in a parking garage on site. Broward County also subsequently confirmed that some leeway is allowed in the split between surface parking spaces and garage parking spaces. A copy of this license, which is valid through February 5, 2013, is attached.

As documented on the site plan, the total parking, surface parking and structured parking being provided in this phase are all within the thresholds established in the Air Quality License issued by the Broward County Environmental Protection Department. Therefore, no further air quality analyses are required for this phase of development.

TEL 561 845 0665
FAX 561 863 8175

BROWARD COUNTY
FLORIDA

ENVIRONMENTAL PROTECTION DEPARTMENT – AIR QUALITY DIVISION
Mailing Address: 115 S. Andrews Avenue, Room A-240 · Fort Lauderdale, Florida 33301
954-519-1220 · FAX 954-519-1495

# AIR LICENSE

## FOR *PARKING FACILITY* CONSTRUCTION PURPOSES ONLY

LICENSE TO CONSTRUCT AN AIR POLLUTION SOURCE ISSUED UNDER THE PROVISIONS OF CHAPTER 27 OF THE BROWARD COUNTY CODE OF ORDINANCES

LICENSE NO. AC-080205 DATE OF ISSUE February 5, 2008

DATE OF EXPIRATION February 5, 2013

LICENSE ISSUED TO:

| | |
|---|---|
| NAME | GPRA, Inc. |
| ADDRESS | 901 South Federal Highway |
| | Hallandale Beach, Fl 33009 |
| TELEPHONE | (954) 454-7000 |
| TO BE KNOWN AS | VILLAGE AT GULFSTREAM PARK EXPANDED PHASE I |
| TO BE LOCATED AT | 901 South Federal Highway, Hallandale Beach, and Florida. |
| FOR THE | Addition of 830 parking spaces. The total number of parking spaces at the site will be 7,500 of which 6,505 will be surface parking and 995 will be parking garage. The build out year for this project is 2008. Section 27, Township 51 South and Range 42 East. |

EMISSIONS LIMITING STANDARDS Chapter 27, Article IV of the Broward County Code of Ordinances.

IN ACCORDANCE WITH THE LICENSE APPLICATION WHICH IS CONSIDERED PART OF THIS LICENSE. THIS LICENSE IS SUBJECT TO ALL BROWARD COUNTY AND LOCAL LAWS, REGULATIONS, RULES, AND THE CONDITIONS ATTACHED HERETO.

Daniela Banu, Director
Air Quality Division

POST THE LICENSE IN A PROMINENT PLACE ON THE PLANT PREMISES.

Broward County Board of County Commissioners
Josephus Eggelletion, Jr. • Sue Gunzburger • Kristin D. Jacobs • Ken Keechl • Ilene Lieberman • Stacy Ritter • John E. Rodstrom, Jr • Diana Wasserman-Rubin • Lois Wexler
www.broward.org

**Village at Gulfstream Park**
**Hallandale Beach, Florida**

**License Number: AC-080205**

# GENERAL CONDITIONS

1. The terms, conditions, requirements, limitations and restrictions set forth herein are accepted by the licensee and must be completed by the licensee and are enforceable by the Environmental Protection Department (EPD) pursuant to this chapter. EPD will review this license periodically and may revoke or suspend the license, and initiate administrative and/or judicial action for any violation of the conditions by the licensee, its agents, employees, servants or representative.

2. This license is valid only for the specific uses set forth in the license application and any deviation from the approved uses may constitute grounds for revocation, suspension, and/or enforcement action by EPD.

3. In the event the licensee is temporarily unable to comply with any of the conditions of the license or with this chapter, the licensee shall notify EPD within eight (8) hours or as stated in the specific section of this chapter. Within three (3) working days of the event, the licensee shall submit a written report to EPD that describes the incident, its cause, the measures being taken to correct the problem and prevent its reoccurrence, the owner's intention regarding the repair, replacement and reconstruction of destroyed facilities and a schedule of events leading toward operation with the license condition.

4. The issuance of this license does not convey any vested rights or exclusive privileges, nor does it authorize any injury to public or private property or any invasion of personal rights, or any violation federal, state or local laws or regulations.

5. This license must be available for inspection on the licensee's premises during the entire life of the license.

6. By accepting this license, the licensee understands and agrees that all records, notes, monitoring data and other information relating to the construction or operation of this licensed facility activity, that are submitted to the county, may be used by the county as evidence in any enforcement proceeding arising under this chapter, except where such use is prohibited by Section 403.111, Florida Statues.

7. The licensee agrees to comply and shall comply with all provision of the most current version of this chapter.

8. Any new owner or operator of a licensed facility shall apply by letter for a transfer of license within thirty (30) days after sale or legal transfer. The transferor shall remain liable for performance in accordance with the license until the transferee applies for and is granted a transfer of license. The transferee shall be liable for any violation of this chapter that results from the transferee's activities. The transferee shall comply with the transferor's original license conditions when the transferee has failed to obtain its own license.

9. The licensee, by acceptance of this license, specifically agrees to allow access and shall allow access to the licensed source, activity or facility at times to EPD personnel for the purposes of inspection and testing to determine compliance with this license and this chapter.

10. This license does not constitute a waiver or approval of any other license, approval, or regulatory requirement by this or any other governmental agency that may be required.

11. Enforcement of the terms and provisions of this license shall be at the reasonable discretion of EPD, and any forbearance on behalf of EPD to exercise its rights hereunder in the event of any breach by the licensee, shall not be deemed or construed to be a waiver of EPD's rights hereunder.

Kimley-Horn
and Associates, Inc.

RECEIVED
NOV 20 2008
ka

November 19, 2008

4431 Embarcadero Drive
West Palm Beach, Florida
33407

Mr. Richard Cannone
City of Hallandale Beach
400 South Federal Highway
Hallandale Beach, Florida 33009

Re: Village at Gulfstream Park DRI – Phase 2 Program of Development
Hallandale Beach, Florida
Job # 042250000

Dear Mr. Cannone:

In accordance with monitoring requirements for the Village at Gulfstream Park Development of Regional Impact (DRI), Kimley-Horn and Associates, Inc. has prepared a cumulative traffic generation calculation for the Phase 2 portion of the DRI development. This includes the following uses and intensities:

- Commercial (retail, restaurant, night club): 337,259 s.f.
- Office: 81,524 s.f.
- Furniture stores: 72,478 s.f.

***Trip Generation Analysis***

An analysis was undertaken to calculate the trip generation potential of the proposed uses. Table 1 presents this trip generation calculation. The trip generation rates and equations published by the Institute of Transportation Engineers (ITE) in *Trip Generation, Seventh Edition* were utilized in this calculation. As shown in Table 1, the proposed development is expected to generate 1,600 gross p.m. peak hour trips.

The Village at Gulfstream Park DRI Development Order states that no Certificates of Occupancy shall be issued for development generating more than 1,750 gross pm peak hour trips prior to the completion of certain required off-site improvements. Because the potential trip generation of 1,600 gross p.m. peak hour trips by this proposed portion of development is less than this 1,750 gross p.m. peak hour trip threshold, additional off-site transportation-related improvements are not required at this time. It is also noted that the actual volume of net new peak hour trips is less than the 1,600 total gross trips because of internal capture transit/non-vehicular capture and pas-by capture not accounted for in this calculation.

TEL 561 845 0665
FAX 561 863 8175

Should you have any questions regarding this calculation, feel free to contact me at 561-845-0665.

Sincerely,

KIMLEY-HORN AND ASSOCIATES, INC.

Christopher W. Heggen, P.E.
Transportation Engineer
11/19/08
Florida Registration
Number 58636
Certificate of Authorization
Number CA 00000696

CWH/mm

Attachments

K:\WPB_TPTO\0422\50000\2008\Trip Threshold and Improvements\111908.doc

**TABLE 1**
**VILLAGE AT GULFSTREAM PARK DRI - PHASE 2 CUMULATIVE DEVELOPMENT**
**TRIP GENERATION POTENTIAL**

| Land Use | Intensity | PM Peak Hour | | |
|---|---|---|---|---|
| | | Total | In | Out |
| **Proposed** | | | | |
| Office | 81,524 s.f. | 170 | 29 | 141 |
| Commercial Retail | 337,259 s.f. | 1,397 | 671 | 726 |
| Furniture Store | 72,478 s.f. | 33 | 15 | 18 |
| | *Subtotal* | ***1,600*** | *715* | *885* |
| | **Total Gross Trips** | **1,600** | **715** | **885** |

Note: Trip generation was calculated using the following data:
PM Peak Hour Traffic

| | | | |
|---|---|---|---|
| Office | [ITE 710] | = | T = 1.12(X) + 78.81 (17% in, 83% out) |
| Commercial Retail | [ITE 820] | = | Ln(T) = 0.66*Ln(x)+3.4 (48% in, 52% out) |
| Furniture Store | [ITE 890] | = | T = 0.46 * 1000 sq ft of GFA (45% in, 55% out) |


*Copyright © 2008, Kimley-Horn and Associates, Inc.*

FLORIDA DEPARTMENT OF HEALTH

Charlie Crist
Governor

Ana M. Viamonte Ros, MD, MPH
State Surgeon General

# WATER MAIN CONSTRUCTION PERMIT

Broward County – MW (Log #12748) (PA #0131028-48-DSGP)
City of Hallandale Beach (PWS #4060573)
(Village at Gulfstream Park Phase ~~1c~~ 2)
October 21, 2008

Kimley-Horn and Associates, Inc.
601 21st Street, Suite 300
Vero Beach, FL 32960

Dear Sir/Madam: Attention: Roscoe L. Biby, P.E.

Receipt is acknowledged of engineering plans and related documents pertaining to a water main extension to serve "Village at Gulfstream Park Phase 1c" with 321 Equivalent Residential Connections (ERC's).
→ Prev. used to identify Bldg 800 (SJB. KA, Inc.) Currently Phase 2

**PROJECT LOCATION:** Northeast corner of U.S.1 and SE 5 St.

Effective **October 16, 2008,** the above-referenced project plans and documents are approved under **Permit No. 6-08-5202 CL** **for construction only** of a total length of 3,847 feet of pipe with the following conditions:

**GENERAL CONDITIONS:**

1. The **engineer of record** shall be responsible for observation of construction and shall inspect for conformity to the plans and specifications as approved. Upon completion of the project, a letter of certification from the **engineer** indicating that construction was carried out in conformance to the approved plans shall be submitted to the Environmental Engineering Section, Broward County Health Department (BCHD). Every certification submittal to the BCHD shall also include one (1) set of "as-built"/record plans, a business check or cash for $50.00, along with copies of pertinent bacteriological main clearance and hydrostatic test reports. Under no circumstances shall water mains permitted herein be placed into operation prior to the issuance of a letter of clearance by the BCHD.

2. Hydrostatic testing of new water mains shall be performed in conformance with the ANSI/AWWA C600-05 Standard.

3. Disinfection of new water mains shall be performed in conformance with the ANSI/AWWA C651-05 Standard.

4. No physical connection of new water mains to active mains shall be made until such time that new mains are confirmed to be bacteriologically safe. Temporary connection of new mains to active mains for the purpose of filling and flushing shall be made by a method deemed acceptable by the BCHD.

5. If you object to or desire to contest any conditions of this permit, you are entitled to file for an appropriate petition for administrative hearing. The petition must be filed within fourteen (14) days of the receipt of this permit letter. Further, the petition must conform to the requirements of the Florida Administrative Code Rule 28-5.201 (see sheet 4). The petition must be filed with the Office of Legal Counsel, BCHD, 780 S.W. 24th Street, Fort Lauderdale, Florida 33315. If no petition is filed within the prescribed period of time, you will be deemed to have accepted this permit and waived your right to request an administrative hearing on this matter

6. Expiration of the subject permit is one (1) year from the date of approval. If the water main project work is not completed before the expiration date, or if the project is to be completed in phases extending beyond the expiration date, a written request and $100.00 fee are to be submitted to the BCHD by the **engineer of record** for extending the permit in one-year increments.

**SPECIFIC CONDITIONS:**

1. No beneficial use shall be made of the proposed water mains to be installed per this permit without written approval from the BCHD.

This approval pertains only to the water utilities serving this development and is not to be construed as approval of the wastewater aspects. All concerned are reminded that approval must be obtained for both water and wastewater facilities prior to construction.

By copy of this letter to the owner, we are advising that approval is given to functional aspects of this project on the basis of representations to and data furnished this department. There may be county, municipal or other local regulations or restrictions to be complied with by the owner prior to construction of the facilities represented by the plans referred to above and we, therefore, recommend that appropriate local agencies be consulted before starting construction.

Two sets of the approved project plans and documents are enclosed herewith.

Very truly yours,

Phong D. Nguyen, P.E.
Acting Director of Environmental Engineering

PN
Enclosures
cc: City of Hallandale Engineering Department
City of Hallandale Utilities Department
City of Hallandale Building Department
Bill Murphy, President Gulfstream Park Racing Association
901 South Federal Hwy, Hallandale Beach, Fl 33009

MODEL RULES OF PROCEDURES
CHAPTER 28-5
DECISION DETERMINING SUBSTANTIAL INTEREST

PART II
FORMAL PROCEEDINGS

28-5.201 Initiation of Formal Proceeding.

(1) Initiation of formal proceedings shall be made by petition to the agency responsible for rendering final agency action. The term petition as used herein includes any application or other document which expresses a request for formal proceedings. Each petition should be printed, typewritten or otherwise duplicated in legible form on white paper of standard legal size. Unless printed, the impression shall be double-spaced and indented.

(2) All petitions filed under these rules should contain:

(a) The name and address of each agency affected and each agency's file or identification number, if known;

(b) The name and address of the petitioner or petitioners, and an explanation of how his/her substantial interest will be affected by the agency determination;

(c) A statement of when and how petitioner received notice of the agency or intent to render a decision;

(d) A statement of all disputed issues of material fact. If there are none, the petition must so indicate;

(e) A concise statement of the ultimate facts alleged, as well as the rules and statutes which entitle the petitioner to relief;

(f) A demand for relief to which the petitioner deems himself entitled; and

(g) Other information which the petitioner contends is material.

**********

A petition may be denied if the petitioner does not state adequately a material factual allegation, such as a substantial interest in the agency determination, or if the petition is untimely. (Section 28-5.201(3)(a), F.A.C.)

General Permit for Extension of Distribution System

# CERTIFICATION

PROJECT NAME: Village At Gulfstream Park Phase 1c
APPLICATION NO.: 0131028-48-DSGP
UTILITY: City of Hallandale Beach
PWS#: 4060573
DATE: October 21, 2008

I hereby certify that the environmental engineering features described in the above referenced application provide reasonable assurance of compliance with applicable provisions of Florida Administrative Chapters 62-555 for use of a general permit for the extension of the distribution system of a Public Water system. This review was limited to the information submitted in the application, engineering plans, and specifications.

I have not evaluated and I do not certify aspects of the proposed project outside of my current area of responsibility and/or expertise (including but not limited to the electrical, mechanical, hydrological, and geological aspects.)

This review was under my direct supervision conducted by Mr. David Bisset.

By: Phong D. Nguyen, P.E.
P.E. #43373
Acting Env. Engineering Director
Broward County Health Department
780 S.W. 24th Street
Ft. Lauderdale, FL 33315-2643
Date: October 21, 2008

FLORIDA DEPARTMENT OF HEALTH

**Broward County Health Department**
**Environmental Engineering Section**
**2421 SW 6 Avenue, Ft. Lauderdale, FL 33315-2613**

3589

## SAFE DRINKING WATER/ POOLS
## ** RECEIPT FOR FEES **

**Centrax Pin Number** | **Reference # (Log/Permit)** 12748 | **Employee I.D. #** 12

**Project Name** Village at Gulfstream Park - Phase 1C **Date** 10/16/08

**Applicant** Kimley-Horn **Utility** Hallandale B.H. (Check #7060)

### PUBLIC WATER TREATMENT PLANT FACILITY APPROVAL

| | | | | | | |
|---|---|---|---|---|---|---|
| 358 AT | a. | Exceeds | 0.00 MGD | Up to and including | 0.10 MGD | $ |
| 358 BT | b. | " | 0.11 MGD | " | 0.50 MGD | $ |
| 358 CT | c. | " | 0.51 MGD | " | 1.00 MGD | $ |
| 358 DT | d. | " | 1.01 MGD | " | 2.00 MGD | $ |
| 358 ET | e. | " | 2.01 MGD | " | 4.00 MGD | $ |
| 358 FT | f. | " | 4.01 MGD | " | 8.00 MGD | $ |
| 358 GT | g. | " | 8.01 MGD | " | 20.00 MGD | $ |
| 358 HT | h. | " | 20.01 MGD | ..... | ..... | $ |
| 358 IT | i. | Public Well Site Evaluation..... | | | ..... | $ |
| 358 PM | j. | Plant Modification - no capacity change | | | | $ |

RECEIVED OCT 16 2008 By

### WATER STORAGE FACILITY APPROVAL

| | | | |
|---|---|---|---|
| 358 T1 | a. | Storage Facility >0.00 MG To 1.00 MG..... | $ |
| 358 T2 | b. | Storage Facility >1.00 MG To 2.00 MG..... | $ |
| 358 T3 | c. | Storage Facility >2.00 MG To 3.00 MG..... | $ |
| 358 T4 | d. | Storage Facility >3.00 MG To 4.00 MG..... | $ |
| 358 T5 | e. | Storage Facility >4.00 MG And Above..... | $ |

### PUBLIC WATER DISTRIBUTION SYSTEM APPROVAL & CONSTRUCTION

| | | | | | | | |
|---|---|---|---|---|---|---|---|
| 358 WA | a. | DEP Major Plant Modification 1MGD +..... | | | | | $ |
| 358 DM | b. | DEP Minor Modification..... | | | | | $ |
| 358 W1 | c. | DEP Water Plant Construction 5+ MGD..... | | | | | $ |
| 358 W2 | d. | DEP Water Plant Construction Up To .1 MGD..... | | | | | $ |
| ~~358 W3~~ | e. | DEP Water Plant Construction 1.01MGD to 5MGD..... | | | | | $ |
| 358 WG | f. | DEP General Permit Fee ..... | | | | | $ 500.00 |
| 358 D1 | g. | Mains <6" | $0 .08 | X | 179 | linear ft = | $ 14.32 |
| 358 D2 | h. | Mains 6" to 10" | $0 .12 | X | 3669 | linear ft = | $ 440.16 |
| 358 D3 | i. | Mains 12" or larger | $0 | X | | linear ft = | $ |
| 358 D4 | j. | Water Project Clearance ..... | | | | | $ |
| 358 WD | k. | DEP Permit Extension Fee ..... | | | | | $ |
| 358 WP | l. | BCHD Permit Extension Fee..... | | | | | $ |
| 358 SW | m. | Other Public Water Supply Well..... | | | | | $ |

### PRIVATE WATER SYSTEM APPROVAL

| | | | |
|---|---|---|---|
| 357 WW | a. | Private water well installation ..... | $ |
| 357 WS | b. | Lab charge ..... | $ |
| 357 WL | c. | Limited Use Construction..... | $ |
| 357 PW | d. | Private Well Delineation..... | $ |
| 357 LU | e. | Limited Use-Commercial Water Registration..... | $ |

### PUBLIC POOL/BATHING PLACE APPROVAL

| | | | |
|---|---|---|---|
| 360 PC | a. | Plan review for original construction | $ |
| 360 PD | b. | Plan review for modification/revision | $ |
| 360 PI | c. | Issuance of initial operating permit | $ |
| _____ | | Other (Specify)_____ | $ |
| | | | TOTAL $ 954.48 |

BCHD-EE/44 (Rev 1/2000) White — Customer Yellow — Engineering Pink — Accounting

BROWARD COUNTY
FLORIDA

SEP 22 2008

Environmental Protection and Growth Management Department
**DEVELOPMENT AND ENVIRONMENTAL REGULATION DIVISION**
115 S. Andrews Avenue, Room A-240 Fort Lauderdale, Florida 33301 • 954-519-1270 • FAX 954-519-1496

September 18, 2008

Gulfstream Park Racing Association, Inc.
Attention: Mr. Bill Murphy, President & General Manager
901 S Federal Hwy
Hallandale Beach, FL 33009

Surface Water Management License Modification
**ERP Permit No. 06-00954-S**
**ERP Application No. 080910-10**
**BCEPD License No. SWM2004-049-8**
**Project: The Village at Gulfstream Park**
Issued date: 8/12/2008
Location: Hallandale 27/51/42

Dear Licensee:

The Environmental Protection Department has reviewed the plans and documents dated September 10, 2008 as a modification to the above referenced license. The request to make changes to the total building area and exfiltration trench system as described in the attached letter is hereby granted. The water quality and quantity requirements are still complied with, therefore the revisions are found to be in compliance with Broward County Natural Resource Protection Code, Section 27-198(a)(1)(d)(2)d and a modification is hereby granted. Please be advised that all previously stipulated conditions of the license remain in effect unless otherwise revised. In addition, all applicable federal, state, or local special district authorizations must be obtained prior to the commencement of construction or alteration of works authorized by this modification.

Should you have any questions, please contact this office at (954) 519-1243.

Sincerely,

David Zeller
Surface Water Management Licensing Section

Attachment

cc: Building Official, City of Hallandale
Roscoe L. Biby, P.E. w/attachments
Kimley-Horn and Associates, Inc.
601 21st St, Suite 300
Vero Beach, FL 32960

Broward County Board of County Commissioners
Josephus Eggelletion, Jr. • Sue Gunzburger • Kristin D. Jacobs • Ken Keechl • Ilene Lieberman • Stacy Ritter • John E. Rodstrom, Jr. • Diana Wasserman-Rubin • Lois Wexler
www.broward.org

Kimley-Horn
and Associates, Inc.

RECEIVED
SEP 10 2008
DMD

Suite 300
601 21st Street
Vero Beach, Florida
32960

September 10, 2008
047873000

Elissa Taylor
Surface Water Management Licensing Section
Broward County Environmental Protection Department
115 South Andrews Avenue, A-240
Ft. Lauderdale, FL 33301
954-519-1264

Subject: Village at Gulfstream Park S27/T51S/R42E
**Surface Water Management License**
**No. SWM2004-049-8**

Dear Mrs. Taylor:

Please accept this letter modification application to modify Surface Water Management License No. SWM2004-049-8 granted by Broward County EPD on 8/12/08 for the Village at Gulfstream Park.

This license modification is requested so as to revise the approved construction plans. The approved Master Drainage Area Exhibit included building area for a future building expansion in Building 1000 and Building 1200, but that expansion was not previously shown on the plans that were approved for construction. The building area approved in SWM2004-049-8 for Phase III.a was 10.44 acres. The total building area now shown on the construction plans submitted herein for approval is 10.04 acres.

The total building area allowed for Phase III.a shall not be reduced as a result of this application in the event that the site plan changes and more building area is required, up to that amount approved on the Master Drainage Area Exhibit. The pervious area for Phase III.a approved in the Master Drainage Area Exhibit will remain unchanged and the remaining approved building area not currently used will be pavement/sidewalk area.

The storm pipe/exfiltration trench system will be revised slightly to accommodate the two building expansions. For this modification, two of the previously approved exfiltration trench sections will be revised; Trench Section #7 and Trench Section #12. In SWM 2004-049-8 Trench Section #7 was 175 feet and Trench Section #12 was 94 feet for a total combined exfiltration trench length of 269 feet and a pre-treatment volume of 0.175 ac-ft. In the revised plans for this modification application Trench Section #12 has been divided into two sections, Trench Section #12a and Trench Section #12b. Trench Section #12a will be 15 feet and Trench Section #12b will be 124 feet. Also in these revised plans, the length of Trench Section #7 will be reduced from 175 feet to 130 feet.

TEL 772 562 7981
FAX 772 562 9689

Kimley-Horn
and Associates, Inc.

The total combined length of the revised Trench Section #7, Trench Section #12a and Trench Section #12b will remain as previously permitted at 269 feet, providing a pre-treatment volume of 0.174 ac-ft (The 0.001 ac-ft difference in provided pre-treatment volume is due to rounding. The provided length, and thus provided volume, remains unchanged).

The control structure arrangement approved in SWM2004-049-8 will not need to be modified to prevent short circuiting of the treatment volume to accommodate the proposed storm pipe/exfiltration trench modifications. All storm water received in the revised storm pipe/exfiltration trench sections will continue to be controlled and treated via the control structures located in Structure S-10 and Structure S-12 as previously approved.

We appreciate your attention to this important project. Please call me at (772) 794-4120 with any questions, comments or requests for additional information.

Sincerely,
KIMLEY-HORN AND ASSOCIATES, INC.

Britt Stephens, E.I.T.
Analyst

Roscoe V. Biby, P.E.
Sr. Vice President

Encl: (3) Exfiltration Trench Calculations – Trench Section #7a, #7b, 12a, #12b – SWM2004-049-08 approved trench calculation for Trench Section #7 and #12
(3) The Village at Gulfstream Park – revised plans Sheet C0, C14, C17 & C19
(1) $100.00 Application fee made payable to BCBCC

BROWARD COUNTY
FLORIDA

Environmental Protection and Growth Management Department
**DEVELOPMENT AND ENVIRONMENTAL REGULATION DIVISION**
115 S. Andrews Avenue, Room A-240 Fort Lauderdale, Florida 33301 • 954-519-1483 • FAX 954-519-1496

# LICENSE FOR INSTALLATION OF WASTEWATER COLLECTION/TRANSMISSION SYSTEM

APPLICANT:
Gulfstream Park Racing Association
Attention: Mr. Bill Murphy, President
901 South Federal Highway
Hallandale Beach, FL 33009

BC-EPD LICENSE NO.: WW-61259
EXPIRATION DATE: 10/22/2013
DEP ID NO.: HOL #054633-396
SEC-TWP-RNG: 27-51-42
PROJECT: The Village at Gulfstream Park - Phase 1C

This license is issued under the provisions of Chapter 27 of the Broward County Code of ordinances. The above named-applicant, hereinafter called licensee, is hereby authorized to perform the work shown on the approved drawing(s), plans, documents, and specifications submitted by applicant and made a part hereof and described specifically below. If no objection to this license is received within 14 days you will be deemed to have accepted it and all the attached terms and conditions.

Your notification of Intent to Use General Permit for construction of the referenced wastewater collection system has been evaluated. This project complies with the Department of Environment Protection General Permit conditions of the Florida Administrative Code rule chapters 62-4, Part II., or for Individual Permit, under FS 403.87 and FAC 62-4, 62-600 and 62-604.

GRAVITY SEWER: 644 LF of 12" PVC @ 0.22% Slope (4 Manholes)

SUBJECT TO SPECIFIC CONDITIONS # 1 through # 6.

| | |
|---|---|
| In accordance with: | Plans, Sheets C-100, C-101, C-107, C-300 thru C-306 (Received 10/07/2008). None Attached. Kimley-Horn and Associates, Inc. Project #: 047873002. |
| Located at: | 901 S FEDERAL HWY, Hallandale Beach 33009 |
| Serving: | 280 MFH Units; 170,000 SF Commercial/Retail Space; 65,000 SF Office Space and 2,500-Seat Movie Theater. |

Issued this 23th day of October, 2008.

Garth Hinckle, Jr, P.E., Supervisor
Water Resources Division

Environmental Protection Department
Prepared by Yvel Rocher

cc: FDEP/WPB
DMD Front Desk
Albert Perez, P.E., Director of Public Utilities, City of Hollywood - WWTP
Roscoe L. Biby, P.E./Kimley-Horn & Associates, Inc. (Vero Beach)

**GENERAL CONDITIONS:**

1. The terms, conditions, requirements, limitations and restrictions set forth herein are accepted by the licensee and enforceable by the EPD pursuant to Chapter 27 of the Broward County Code of Ordinances. The EPD will review this license periodically and may revoke the license, initiate administrative and/or judicial action for any violation of the conditions by the licensee, its agents, employees, servants or representatives.

2. This license is valid only for the specific uses set forth in the license application and any deviation from the approved uses may constitute grounds for revocation and enforcement action by the EPD.

3. In the event the Licensee is temporarily unable to comply with any of the conditions of the license, the licensee shall notify the Broward County Environmental Protection Department within 8 hours. Within 3 working days of the event, the licensee shall submit a written report to the Broward County Environmental Protection Department that describes the incident, its cause, the measures being taken to correct the problem and prevent its reoccurrence, the owner's intention toward repair, replacement, and reconstruction of destroyed facilities, and a schedule of events leading toward operation within the license condition.

4. The issuance of this license does not convey any vested rights or exclusive privileges, nor does it authorize any injury to public or private property or any invasion of personal rights, or any violations of federal, state or local laws or regulations.

5. This license must be available for inspection on Licensee's premises during the entire life of the license.

6. By accepting this license, the Licensee understands and agrees that all records, notes, monitoring data and other information relating to the construction or operation of this permitted source, that are submitted to the EPD, may be used by the EPD as evidence in any enforcement proceeding arising under Chapter 27 of the Broward County Code of Ordinances, except where such use is prohibited by Section 403.111, Florida Statues.

7. This Licensee agrees to comply with Chapter 27, Broward County Code of Ordinances, as amended.

8. Any new owner of a licensed facility shall apply by letter for a transfer of license within thirty (30) days after sale or legal transfer. The transferor shall remain liable for performance in accordance with the license until the transferee applies for, and is granted a transfer of license. The Transferee shall also be liable for performance in accordance with the license.

9. The licensee, by acceptance of this license, specifically agrees to allow access to the licensed source at reasonable times by EPD personnel for the purposes of inspection and testing to determine compliance with this license and Chapter 27 of the Broward County Code of Ordinances.

10. This license does not constitute a waiver or approval of any other license that may be required for other aspects of the total project.

11. If the Licensee wishes to renew the license or extend it terms, he shall make application 60 days prior to its expiration. Expired licenses are not renewable.

12. In addition to the general conditions set forth above, each license issued by the EPD shall contain specific conditions determined by site conditions and requirements pursuant to the regulations as determined by the Broward County Environmental Protection Department. Licensee agrees that specific conditions are enforceable by the EPD for any violation thereof.

**SPECIFIC CONDITIONS:**

1. This license is valid for construction of the sewage collection/transmission system only. All connections to the system must be approved by the Broward Environmental Protection Department prior to the issuance of a building permit.

2. Any deviation from approved plans or specifications affecting capacity, flow or operation of units shall be submitted to and approved by the Broward County Environmental Protection Department before such changes are made.

3. The applicant shall be responsible for supplying as-built drawing to the Broward County Environmental Protection Department on completion of the project. Such drawing will be signed and sealed by an engineer registered in the state of Florida and shall be based on accurate records maintained by the engineer or by a land surveyor currently registered in the state of Florida. Such drawing will indicate locations and elevations of all pipe line, manholes, pump stations and appurtenance installed under this project. No connections to the system Will Be Approved until the above Described As-built Drawings Have Been Delivered to and Approved by the Broward County Environmental Protection Department.

APPLICANT:
Gulfstream Park Racing Association
Attention: Mr. Bill Murphy, President
901 South Federal Highway
Hallandale Beach, FL 33009

BC-DPEP LICENSE NO.: WW-61259
EXPIRATION DATE: 10/22/2013
DEP ID NO.: HOL #054633-396
SEC-TWP-RNG: 27-51-42
PROJECT: The Village at Gulfstream Park - Phase 1C

**SPECIFIC CONDITIONS (Continued From Page 2)**

4. An email PDF of the As-Built Site Plan which clearly displays the contents of the project as well as delineating its boundary shall be submitted to EPD at the time of the certification.

5. Private Sanitary Sewage System (Gravity Only): The minimum requirements for Certification of Construction are: (1) A service boundaries agreement with the local sewage system maintenance authority, defining the extents of responsibilty and areas served, to include under what conditions the Private System would not be permitted to operate. (2) service agreements with private and public entities (Note: The private service contract(s) shall have a termination clause requiring the contractor to notify EPD Wastewater Section (954) 519-1256 at the time of contract termination.); (3) lamping reports, leakage tests, etc.; (4) a discription of the system, along with an 8-1/2" x 11" plan; (5) one set of certified record drawings. EPD will review and issue a letter of approval to all parties.

6. Private Sanitary Sewage System Maintenance Requirements: A copy of the condominium, homeowners, or property owners association documents shall be submitted with the Certification of Completion of Construction documentation. The documents shall contain language that affords assurance for appropriate future operation and maintenance of the system in accordance with FAC 62-604-500. A facility efficiency test and condition report shall be conducted six weeks prior to the termination of the operation and maintenance contract and submitted to EPD Wastewater Section.

# Florida Department of Environmental Protection

Southeast District
400 N. Congress Avenue, Suite 200
West Palm Beach, Florida 33401

Charlie Crist
Governor

Jeff Kottkamp
Lt. Governor

Michael W. Sole
Secretary

CERTIFIED MAIL

In the Matter of an
Application for Permit by:

Gulfstream Park Racing Association
Attention: Mr. Bill Murphy, President
901 South Federal Highway
Hallandale Beach, FL 33009

| | |
|---|---|
| PERMIT NUMBER: | HOL #054633-396 |
| EPD LICENSE: | WW-61259 |
| ISSUANCE DATE: | 10/23/2008 |
| EXPIRATION DATE: | 10/22/2013 |
| COUNTY: | BROWARD |
| PROJECT: | The Village at Gulfstream Park - Phase 1C |
| CONNECTED TO: | Hollywood |

NOTICE OF PERMIT ISSUANCE

Enclosed is Permit No. HOL #054633-396 to construct a domestic wastewater collection/transmission system, issued pursuant to 403.087(1), Florida Statutes.

The Department's proposed agency action shall become final unless a timely petition for an administrative hearing is filed under Sections 120.569 and 120.57, Florida Statutes, within fourteen days of receipt of notice. The procedures for petitioning for a hearing are set forth below.

A person whose substantial interests are affected by the Department's proposed permitting decision may petition for an administrative proceeding (hearing) under Sections 120.569 and 120.57, Florida Statutes. The petition must contain the information set forth below and must be filed (received by the clerk) in the Office of General Counsel of the Department at 3900 Commonwealth Boulevard, Mail Station 35, Tallahassee, Florida 32399-3000.

Petitions by the applicant or any of the persons listed below must be filed within fourteen days of receipt of this written notice. Petitions filed by any persons other than those entitled to written notice under Section 120.60(3), Florida Statutes, must be filed within fourteen days of publication of the notice or within fourteen days of receipt of the written notice, whichever occurs first. Under Section 120.60(3), Florida Statutes, however, any person who has asked the Department for notice of agency action may file a petition within fourteen days of receipt of such notice, regardless of the date of publication.

The petitioner shall mail a copy of the petition to the applicant at the address indicated above at the time of filing. The failure of any person to file a petition within fourteen days of receipt of notice shall constitute a waiver of that person's right to request an administrative determination (hearing) under Sections 120.569 and 120.57, Florida Statutes. Any subsequent intervention (in a proceeding initiated by another party) will be only at the discretion of the presiding officer upon the filing of a motion in compliance with Rule 28-106.205, Florida Administrative Code.

A petition that disputes the material facts on which the Department's action is based must contain the following information:

(a) The name, address, and telephone number of each petitioner; the name, address, and telephone number of the petitioner's representative, if any; the Department permit identification number and the county in which the subject matter or activity is located;

(b) A statement of how and when each petitioner received notice of the Department action;

(c) A statement of how each petitioner's substantial interests are affected by the Department action;

(d) A statement of all disputed issues of material fact. If there are none, the petition must so indicate;

(e) A statement of facts that the petitioner contends warrant reversal or modification of the Department action;

(f) A concise statement of the ultimate facts alleged, as well as the rules and statutes which entitle the petitioner to relief; and

(g) A statement of the relief sought by the petitioner, stating precisely the action that the petitioner wants the Department to take.

Because the administrative hearing process is designed to formulate final agency action, the filing of a petition means that the Department's final action may be different from the position taken by it in this notice. Persons whose substantial interests will be affected by any such final decision of the Department have the right to petition to become a party to the proceeding, in accordance with the requirements set forth above.

Mediation under Section 120.573, Florida Statutes, is not available for this proceeding.

This permit action is final and effective on the date filed with the clerk of the Department unless a petition is filed in accordance with the above. Upon the timely filing of a petition this permit will not be effective until further order of the Department.

Any party to the permit has the right to seek judicial review of the permit action under Section 120.68, Florida Statutes, by the filing of a notice of appeal under Rules 9.110 and 9.190, Florida Rules of Appellate Procedure, with the clerk of the Department in the Office of General Counsel, 3900 Commonwealth Boulevard, Mail Station 35, Tallahassee, Florida, 32399-3000; and by filing a copy of the notice of appeal accompanied by the applicable filing fees with the appropriate district court of appeal. The notice of appeal must be filed within 30 days from the date when this permit action is filed with the clerk of the Department.

Executed in Plantation, Florida

BROWARD COUNTY
Environmental Protection Department
as delegated agent for:
STATE OF FLORIDA DEPARTMENT
OF ENVIRONMENTAL PROTECTION

Jennifer L. Jurado, Ph.D., Director
Water Resources Division

FILING AND ACKNOWLEDGMENT

FILED, on this date, under Section 120.52, Florida Statutes, with the designated deputy clerk, receipt of which is hereby acknowledged.

Yvel Rocher

10/27/08
Date

CERTIFICATE OF SERVICE

The undersigned hereby certifies that this NOTICE OF PERMIT ISSUANCE and all copies were mailed before the close of business on/or before the date noted below to the listed persons.

Yvel Rocher

10/29/08
Date

Certified copies furnished to: Gulfstream Park Racing Association

Copies furnished by U.S. mail to: FDEP/WPB
DMD Front Desk
Albert Perez, P.E., Director of Public Utilities, City of Hollywood - WWTP
Roscoe L. Biby, P.E./Kimley-Horn & Associates, Inc. (Vero Beach)

# Florida Department of Environmental Protection

Southeast District
400 N. Congress Avenue, Suite 200
West Palm Beach, Florida 33401

Charlie Crist
Governor

Jeff Kottkamp
Lt. Governor

Michael W. Sole
Secretary

## State of Florida
## Domestic Wastewater Collection/Transmission Individual Permit

PERMITTEE:

Gulfstream Park Racing Association
Attention: Mr. Bill Murphy, President
901 South Federal Highway
Hallandale Beach, FL 33009

| | |
|---|---|
| PERMIT NUMBER: | HOL #054633-396 |
| EPD LICENSE: | WW-61259 |
| ISSUANCE DATE: | 10/23/2008 |
| EXPIRATION DATE: | 10/22/2013 |
| COUNTY: | BROWARD |
| PROJECT: | The Village at Gulfstream Park - Phase 1C |
| CONNECTED TO: | Hollywood |

This permit is issued under the provisions of Chapter 403, Florida Statutes (F.S.), and Chapters 62-4 and 62-604, Florida Administrative Code (F.A.C.). The Broward County Environmental Protection Department (EPD) issues this permit as a delegated local program of the Florida Department of Environmental Protection (Department).

The above named permittee is hereby authorized to construct the facilities shown on the application and other documents on file with the Department and/or EPD and made a part hereof and specifically described as follows:

| | |
|---|---|
| DESCRIPTION OF PROJECT: | GRAVITY SEWER: 644 LF of 12" PVC @ 0.22% Slope (4 Manholes) |
| TO SERVE: | 280 MFH Units; 170,000 SF Commercial/Retail Space; 65,000 SF Office Space and 2, |
| LOCATION OF PROJECT: | 901 S FEDERAL HWY, Hallandale Beach 33009 |
| IN ACCORDANCE WITH: | The limitations, requirements and other conditions set forth in this permit. |

EPD License No. WW-61259 has also been issued for this project.

PERMITTEE:

Gulfstream Park Racing Association
Attention: Mr. Bill Murphy, President
901 South Federal Highway
Hallandale Beach, FL 33009

| | |
|---|---|
| PERMIT NUMBER: | HOL #054633-396 |
| EPD LICENSE: | WW-61259 |
| ISSUANCE DATE: | 10/23/2008 |
| EXPIRATION DATE: | 10/22/2013 |
| COUNTY: | BROWARD |
| PROJECT: | The Village at Gulfstream Park - Phase 1C |
| CONNECTED TO: | Hollywood |

**PERMIT CONDITIONS:**

1. This permit is subject to the general conditions of Rule 62-4.160, F.A.C., as applicable. This rule is available at the Department's Internet site at: http://www.dep.state.fl.us/water/wastewater/rules.htm#domestic [62-4.160, 05/01/2003]

2. Upon completion of construction of the collection/transmission system project, and before placing the facilities into operation for any purpose other than testing for leaks or testing equipment operation, the permittee shall submit to the EPD Form 65-604.300(8)(b), Request for Approval to Place a Domestic Wastewater Collection/Transmission System into Opeartion. This form is available at the Department's Internet site at: http://www.dep.state.fl.us/water/wastewater/forms.htm [62-604.700(2), 11/06/2003]

3. The new or modified collection/transmission facilities shall not be placed into service until the EPD clears the project for use. [62.607.700(3), 11/06/2003]

4. Permit revisions shall only be made in accordance with Rule 62-4.050(4)(s), F.A.C. Request for revisions shall be made to the EPD in writing and shall include the appropriate fee. Revisions not covered under Rule 62-4.050(4)(s), F.A.C., shall require a new permit. [62-604.600(8), 11/06/2003]

5. Abnormal events shall be reported to the Department's West Palm Beach District Office and EPD in accordance with Rule 62-604.550, F.A.C. For unauthorized spills of wastewater in excess of 1000 gallons per incident, or where information indicates that public health or the environment may be endangered, oral reports shall be provided to the STATE WARNING POINT TOLL FREE NUMBER (800) 320-0519 as soon as practical, but no later than 24 hours from the time the permittee or other designee becomes aware of the circumstances. Unauthorized releases or spills less than 1000 gallons per incident are to be reported orally to the Deparment's West Palm Beach District Office and EPD within 24 hours from the time the permittee, or other designee becomes aware of the circumstances. [62-604.550, 11/06/2003]

PERMITTEE:

Gulfstream Park Racing Association
Attention: Mr. Bill Murphy, President
901 South Federal Highway
Hallandale Beach, FL 33009

| | |
|---|---|
| PERMIT NUMBER: | HOL #054633-396 |
| EPD LICENSE: | WW-61259 |
| ISSUANCE DATE: | 10/23/2008 |
| EXPIRATION DATE: | 10/22/2013 |
| COUNTY: | BROWARD |
| PROJECT: | The Village at Gulfstream Park - Phase 1C |
| CONNECTED TO: | Hollywood |

Executed in Plantation, Florida

BROWARD COUNTY
Environmental Protection Department

Jennifer L. Jurado, Ph.D., Director
Water Resources Division

As delegated agent for:
State of Florida,
Department of Environmental Protection

DATE: 10/27/08

BROWARD COUNTY FLORIDA
ENVIRONMENTAL PROTECTION DEPARTMENT - Water Resources Division
Mailing Address: 115 South Andrews Avenue, Room A-240 • Fort Lauderdale, Florida 33301 954-519-1270 • FAX 954-519-1496

# SURFACE WATER MANAGEMENT LICENSE APPLICATION

Please consult Chapter 27, Broward County Code of Ordinances [Section 27-199 (c) (2)] for specific requirements needed to provide a complete application. Copies of these regulations are available upon request. Many projects also require approval by other State, Federal and Local agencies.

**Type of License** (check ONE): [ ] General [ ] Conceptual [ ] Conceptual Concurrent with DRI
[ ] SWM [x] SWM Modification to Permit No. SWM2004-049-8

**Project Information:**
Project Title: Village at Gulfstream Park - Phase 1C
Project Address: 901 S. Federal Highway, Hallandale Beach, FL
Land use type (residential, commercial, etc.): Commercial/Mixed Use
Location: Section 27 Township 51S Range 42E
Project Acres: 4.62 Acres of Impervious 3.68 Total Acres, per Survey: 206.64
BCPA Folio Number(s): 514227010540

**Property Owner Information:**
Name: Gulfstream Park Racing Association
Address: 901 S. Federal Highway, Hallandale Beach, FL
Contact Name (if different from Owner):
William Murphy, President Phone: (954) 457-6100

**System Designer:**
Firm Name: Kimley-Horn and Associates, Inc.
Address: 601 21st St., Suite 300, Vero Beach, FL 32960
Engineer of Record: Roscoe L. Biby, P.E. Phone: (772) 794-4040

**Who will be responsible for the Surface Water Management system after construction?**

William Murphy, GPRA
(Name of Person or Entity)

**Owner/Agent Name (print):**

William Murphy

**Owner/Agent Signature:**

(If Agent – written authorization must be attached)

STATE OF FLORIDA)

COUNTY OF _____ )

Before me personally appeared _____
as _____
of _____
to me known to be the person(s) described in and who executed the foregoing instrument and acknowledged to and before me that _____ executed said instrument for the purpose expressed.

WITNESS my hand and official seal this _____ day of _____, _____

_____
NOTARY PUBLIC, STATE OF FLORIDA

My commission expires: _____

CALLISON

**MEMORANDUM**

December 12, 2008

Ms. Christy Dominguez
City of Hallandale Beach
400 South Federal Highway
Hallandale Beach, FL 33009

From: Elijah Driscol

Re: Village at Gulfstream Park – Building 800
209038.01
Intended Hallandale Beach Design Guidelines compliance

This memorandum is in regards to design intent for the new retail structure identified as "Building 800" at Village at Gulfstream Park, located at South Federal Highway/US 1 & Breeze Way in Hallandale Beach.

The current design of this new retail building has incorporated the intent of the Hallandale Beach Design Guidelines. The following is summary of our design intent and our response to the specific elements noted in the Hallandale Beach Design Guidelines:

1. Windows are included on each elevation of the façade to increase visibility from exterior.
2. The two main storefront systems and façade treatment are coordinated with similar color and materials to demonstrate compatibility and consistency in style throughout the exterior elevations.
3. The main storefront entrances are easily identified from street and parking lot.
4. The "pick up" windows are designed with the main storefront elements as integrated part of our main façade.
5. The roof-mounted mechanical equipment is screened from view. The mechanical screens will be painted to match the building color and will not be visible from the street level.
6. The scale of the building and the lot coverage is compatible with the adjacent land uses.
7. The basic color schemes are designed to blend with the development. Accent colors and materials are selected to enhance the architectural details.
8. Signage is designed in proportion to the scale of the exterior elevations and the materials are selected as integral architectural elements.
9. Landscaping will be provided to enhance the overall architectural and design theme of the property but not overpower it.
10. Fabric awnings and an entry trellis are designed as an integral part of the architecture.
11. Lighting design will provide safety and clear path of travel around the building. The lighting is also designed as integral part of the overall architecture and landscaping to enhance specific design features.

1420 FIFTH AVENUE #2400 SEATTLE, WASHINGTON 98101-2343
T 206 623 4646 F 206 623 4625 www.callison.com

Sincerely,

Elijah Driscol, LEED AP
Project Architect

ED:sc

Enclosure

c: Forest City Commercial Group: Will Vogele, Stephanie Dorsey, Bill Rowe
KA Inc.: Sue Bercik, Tom Simecek
Callison: Shirley Cheng, Sam Wilson, File #209038.01

H:\Projects\WSonoma\Gulfstream - Building 850\Correspondence\26-Intra-Team Correspondence\08_1212 MDP resubmittal\vgp800_MDP design narrative_121008.doc

Crate & Barrel
Architecture Department
1250 Techny Road
Northbrook, Illinois 60062
Telephone: (847) 239-6688
Fax: (847) 272-1305

December 12, 2008

# Crate & Barrel: The Village at Gulfstream Park - Design Compatibility

The proposed Crate & Barrel home store at Gulfstream Park will join a dynamic collection of retail tenants in the development of this landmark racetrack into a lifestyle center. Crate & Barrel will bring its full collection of house wares merchandise and furniture to this location in a way that is representative of the brand identity and is contextually sensitive to the center.

Crate & Barrel is recognized by its "warm modern" aesthetic and articulation of building volumes, which together create a truly unique retail experience. Crate & Barrel has addressed the center's Mediterranean vocabulary with several architectural gestures. The materials used are consistent with south Floridian architecture and the overall style of the mall. Textured EIFS, white metal, and stained masonry are used in shades of white, allowing the various materials and textures to interact with one another, defining elements of the building. The building volume is broken down to address both the vehicular and pedestrian scale. As one approaches the building, a two story volume containing a display window will add visual interest and presence to the mall entrance. Up lighting and landscape areas on the North and West facades further enhance the architecture while offering views into the store. Along Breeze Way the north façade is broken up with a rhythm of vertical slot windows in a textured EIFS wall. Customers will experience a series of framed views into the house wares store.

The building height drops to one story at the corner of Breeze Way and Seabiscuit Trail to engage pedestrian traffic. A covered arcade and several large display windows encourage pedestrians to view merchandise while remaining protected from the elements. The canopy covering the arcade will also act as a visual link to the center by drawing from the horizontal lines throughout. The entrance is located on Seabiscuit Trail within the covered arcade, and is flanked by two large display windows, one containing house wares merchandise, and the other furniture settings. These windows are designed to blur the line between interior and exterior space; a design philosophy Crate & Barrel celebrates. As the exterior architecture carries into the building and becomes a canvas for the merchandise, the displays are visually connected with the building and the customer. The intent is to create a retail experience that is elegant, exciting, and distinctly Crate & Barrel.

Respectfully submitted,

Peter Wehrli
Project Architect
Crate & Barrel

Crate&Barrel

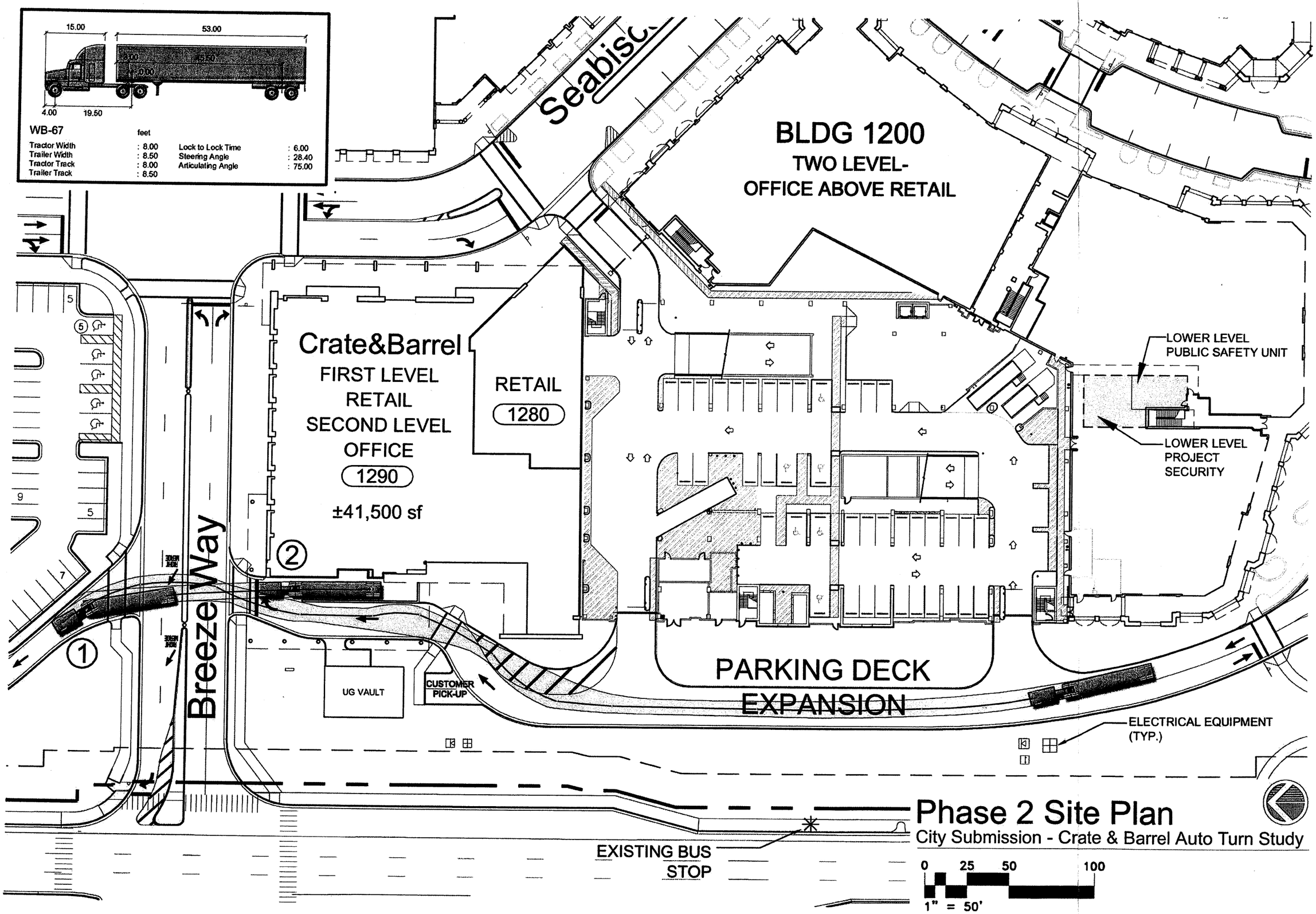


# Phase 2 Site Plan

City Submission - Crate & Barrel Auto Turn Study

The Village at Gulfstream Park
Hallandale Beach, Florida
Gulfstream Park, LLC

Sheet Description: PHASE 2 SITE PLAN
CITY SUBMISSION
CRATE & BARREL AUTO TURN STUDY

KA/jn: 05044-01
Drawn By: TFS
Scale: 1"=50'-0"
Date: 12 DEC 08
Sheet #: EXHIBIT AT-1A

X:\Projects\05044\Drawings\04 CD\Site Concept\02_MDP\02_PHASE 2 DEV\2008-12-12 PHASE 2 City Submission 05044_recover.dwg - KA INC.CTB - Thomas Simecek - 12/8/2008 3:50:36 PM

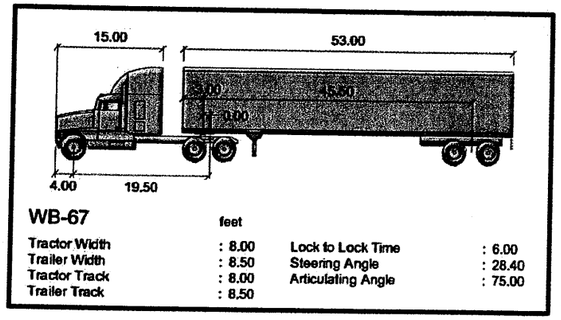


WB-67 feet

| | | | |
|---|---|---|---|
| Tractor Width | : 8.00 | Lock to Lock Time | : 6.00 |
| Trailer Width | : 8.50 | Steering Angle | : 28.40 |
| Tractor Track | : 8.00 | Articulating Angle | : 75.00 |
| Trailer Track | : 8.50 | | |

L RETAIL

5

Seabiscu

BLDG 1200
TWO LEVEL-
OFFICE ABOVE RETAIL

Crate&Barrel
FIRST LEVEL
RETAIL
SECOND LEVEL
OFFICE
1290
±41,500 sf

RETAIL
1280

LOWER LEVEL
PUBLIC SAFETY UNIT

LOWER LEVEL
PROJECT
SECURITY

Breeze Way

UG VAULT

CUSTOMER
PICK-UP

PARKING DECK
EXPANSION

ELECTRICAL EQUIPMENT
(TYP.)

EXISTING BUS
STOP

# Phase 2 Site Plan

City Submission - Crate & Barrel Auto Turn Study

0 25 50 100

1" = 50'

ka
cleveland
tampa

The Village at Gulfstream Park
Hallandale Beach, Florida
Gulfstream Park, LLC

Sheet Description:
PHASE 2 SITE PLAN
CITY SUBMISSION
CRATE & BARREL AUTO TURN STUDY

KA/jn: 05044-01
Drawn By: TFS
Scale: 1"=50'-0"
Date: 12 DEC 06
Sheet #: EXHIBIT AT-1B

X:\Projects\05044\Drawings\04 CD\Site Concept\02_MDP-02_PHASE 2 REV2006-12-12 PHASE 2 City Submission 05044_recover.dwg -- KA INC.CTB -- Thomas Simecek - 12/9/2006 9:03:25 AM

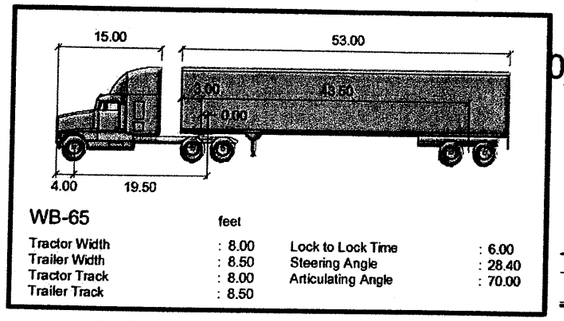


WB-65 feet

| | | | |
|---|---|---|---|
| Tractor Width | : 8.00 | Lock to Lock Time | : 6.00 |
| Trailer Width | : 8.50 | Steering Angle | : 28.40 |
| Tractor Track | : 8.00 | Articulating Angle | : 70.00 |
| Trailer Track | : 8.50 | | |

Seabisc

BLDG 1200
TWO LEVEL-
OFFICE ABOVE RETAIL

Crate&Barrel
FIRST LEVEL
RETAIL
SECOND LEVEL
OFFICE
1290
±41,500 sf

RETAIL
1280

LOWER LEVEL
PUBLIC SAFETY UNIT

LOWER LEVEL
PROJECT
SECURITY

Breeze Way

SERVICE

UG VAULT

CUSTOMER
PICK-UP

PARKING DECK
EXPANSION

ELECTRICAL EQUIPMENT
(TYP.)

EXISTING BUS
STOP

# Phase 2 Site Plan
City Submission - BLDG 1200 Auto Turn Study

0 25 50 100
1" = 50'

ka cleveland tampa

The Village at Gulfstream Park
Hallandale Beach, Florida
Gulfstream Park, LLC

Sheet Description:
PHASE 2 SITE PLAN
CITY SUBMISSION - BLDG 1200
MOVING VAN AUTO TURN STUDY

KA/jn 05044-01
Drawn By TFS
Scale 1"=50'-0"
Date: 12 DEC 08
Sheet # EXHIBIT AT-2A

X:\Projects\05044\Drawings\04 CDS\Site Concept\02_MDP\02_PHASE 2 DEV\2008-12-12 PHASE 2 City Submission 05044_recover.dwg -- KA INC.CTB -- Thomas Simcock -- 12/9/2008 9:00:19 AM

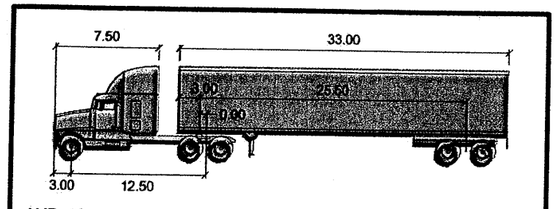


WB-40 feet

| | | | |
|---|---|---|---|
| Tractor Width | : 8.00 | Lock to Lock Time | : 6.00 |
| Trailer Width | : 8.00 | Steering Angle | : 20.30 |
| Tractor Track | : 8.00 | Articulating Angle | : 70.00 |
| Trailer Track | : 8.00 | | |

Seabiscuit Trail

1005

BLDG 800
ONE-LEVEL
RETAIL

±28,400 sf

SERVICE

EMPLOYEE PARKING

1

2

Crate&Barrel
FIRST LEVEL
RETAIL
SECOND LEVEL
OFFICE

1290

±41,500 sf

Breeze Way

SERVICE

UG VAULT

CUSTOM PICK-U

# Phase 2 Site Plan

City Submission - BLDG 800 Auto Turn Study

0 25 50 100

1" = 50'

ka cleveland tampa

The Village at Gulfstream Park
Hallandale Beach, Florida
Gulfstream Park, LLC

Sheet Description: PHASE 2 SITE PLAN
CITY SUBMISSION
BLDG 800 AUTO TURN STUDY

KA/jn: 05044-01

Drawn By: TFS

Scale: 1"=50'-0"

Date: 12 DEC 08

Sheet #: EXHIBIT AT-3A

X:\Projects\05044\Drawings\04 CD\Site Concept\02_MDP\02_PHASE 2 DEV\2008-12-12 PHASE 2 City Submission 05044.dwg -- KA INC.CTB -- Thomas Simecek -- 12/10/2008 10:28:11 AM

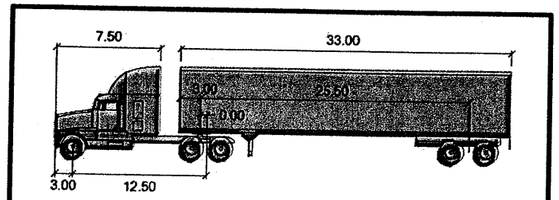


WB-40 feet

| | | | |
|---|---|---|---|
| Tractor Width | : 8.00 | Lock to Lock Time | : 6.00 |
| Trailer Width | : 8.00 | Steering Angle | : 20.30 |
| Tractor Track | : 8.00 | Articulating Angle | : 70.00 |
| Trailer Track | : 8.00 | | |

Seabiscuit Trail

1005

BLDG 800
ONE-LEVEL
RETAIL

±28,400 sf

SERVICE

EMPLOYEE PARKING

ONE WAY

Crate&Barrel
FIRST LEVEL
RETAIL
SECOND LEVEL
OFFICE

1290

±41,500 sf

Breeze Way

SERVICE

UG VAULT

CUSTOMER PICK-U

# Phase 2 Site Plan

City Submission - BLDG 800 Auto Turn Study

0 25 50 100

1" = 50'

ka cleveland tampa

The Village at Gulfstream Park
Hallandale Beach, Florida
Gulfstream Park, LLC

Sheet Description:
PHASE 2 SITE PLAN
CITY SUBMISSION
BLDG 800 AUTO TURN STUDY

KA/jn: 05044-01
Drawn By: TFS
Scale: 1"=50'-0"
Date: 12 DEC 08
Sheet #: EXHIBIT AT-3B

X:\Projects\05044\Drawings\04 CD\Site Concept\02_MDP\02_PHASE 2 DEV\2008-12-12 PHASE 2 City Submission 05044.dwg - KA INC.CTB - Thomas Smeeck - 12/10/2008 9:44:49 AM